FIRESTOP SUBMITTAL PACKAGE

Wood Frame

PROJECT:

_____

_____

_____

_____

_____

_____

SUBMITTED BY:

Specified Technologies Inc.

SpecSeal FIRESTOP PRODUCTS

200 Evans Way • Somerville, NJ 08876 • (800) 992-1180 • (908) 526-8000 • Fax (908) 526-9623

Wood Frame

Floors: Mechanical

SYSTEM	DESCRIPTION	PRODUCT(S)
F-C-1074	Max.4 in.steel,iron or copper.Opt.chase wall.Caulk and walk.	LCI Sealant
F-C-2032	Max.4 in.PVC,ABS,CPVC,max.1 in.PB,PEX,PEX-AL-PEX.Caulk only.Chase wall.	LCI Sealant
F-C-2156	Max.1.5 in.PVC or ABS tub/shower drain.Caulk only.	LCI Sealant
F-C-2157	Max.4 in.ABS,PVC vent stack and branch piping.Caulk only.Chase wall.	LCI Sealant
F-C-2158	Max.4 in.PVC,ABS vent stack and branch piping.	LCC Collar,LCI Sealant
F-C-5043	Max.4 in.steel,iron or copper with 1 in.FG or AB/PVC.Caulk and walk.	LCI Sealant
F-C-7014	Max.4 in.steel HVAC duct.Opt.chase wall.Caulk and walk.	LCI Sealant
F-C-8021	Mult.AC Line Sets.Opt.Chase wall.Caulk and walk.	LCI Sealant

Walls: Mechanical

SYSTEM	DESCRIPTION	PRODUCT(S)
W-L-1222	Max.8 in.steel,iron or max.4 in.copper pipe.	LCI Sealant
W-L-1223	Max.8 in.steel,iron or max.4 in.copper pipe.Steel sleeve.Caulk and Walk.	LCI Sealant
W-L-2237	Max.4 in.PVC,ccPVC,CPVC,ABS or ccABS pipe	LCC Collar
W-L-2241	Caulk and Walk..Max.2 in.PVC,CPVC pipe or 1-1/2 in.ABS pipe.Caulk and Walk.	LCI Sealant
W-L-2242	Mult.max.1 in.PEX,PVC,CPVC pipes.Caulk and Walk.	LCI Sealant
W-L-5121	Max.6 in.steel,iron pipe,max.4 in.copper with 2 in.fiber glass.Caulk and walk.	LCI Sealant
W-L-5122	Max.4 in.steel,iron pipe,max.2 in.copper with 3/4 in.AB/PVC.Caulk and walk.	LCI Sealant
W-L-5123	Max.6 in.steel,iron,max.4 in.copper with 3 in.Foam Glass.Caulk and walk.	LCI Sealant
W-L-7060	Rectangular steel HVAC duct.	LCI Sealant
W-L-7061	Max.8 in.round steel HVAC duct.A	LCI Sealant
W-L-8025	Air Conditioner Line Set.Caulk and Walk.	LCI Sealant

Floors: Electrical

SYSTEM	DESCRIPTION	PRODUCT(S)
F-C-1074	Max.4 in.steel conduit or EMT.Opt.chase wall.Caulk and walk.	LCI Sealant
F-C-2032	4 in.PVC conduit.Caulk only.Chase wall.	LCI Sealant
F-C-3057	Cable bundle.Opt.Chase wall.Caulk and walk.	LCI Sealant

Gypsum Board Walls

SYSTEM	DESCRIPTION	PRODUCT(S)
W-L-1222	Max.8 in.steel,iron or max.4 in.copper pipe.Caulk and Walk.	LCI Sealant
W-L-2241	Max.2 in.PVC,CPVC pipe or 1-1/2 in.ABS pipe.Caulk and Walk.M	LCI Sealant
W-L-3169	Max.4-1/2 in.cable bundle.Caulk and walk.	LCI Sealant
W-L-3171	Single electrical,telephone or data cable.Caulk and Walk.	LCI Sealant
W-L-3170	Max.4-1/2 in.cable bundle.Steel sleeve.	LCI Sealant
CLIV	Metallic or nonmetallic electrical boxes	Putty/Putty Pads

Wood Frame-(Cont.)

General Certificate of Conformance

Product Data Sheets

Series LCI Intumescent Sealant
Series LCC Intumescent Collar
Series SSP Putty & Putty Pads

Material Safety Data Sheets

Series LCI Intumescent Sealant
Series LCC Intumescent Collar
Series SSP Putty & Putty Pads

Wall Opening Protective Materials (CLIV)

This category covers proprietary compositions which are used to maintain the hourly ratings of fire resistive walls and partitions containing flush mounted devices such as outlet boxes, electrical cabinets and mechanical cabinets. The individual Classifications indicate the specific applications and the method of installation for which the materials have been evaluated.

The basic standard used to investigate products in this category is ANSI/UL 263, “Fire Tests of Building Construction and Materials”.

SPECIFIED TECHNOLOGIES INC **R14288**
SUITE 2 200 EVANS WAY, SOMERVILLE NJ 08876

SpecSeal Power Shield EP23 Box Inserts, for use with max 2 by 3 by 2-1/4 in. deep flush device UL Listed Metallic Outlet Boxes without internal clamps installed with steel extension rings and steel cover plates in 2 h fire rated gypsum wallboard wall assemblies framed with min 3-5/8 in. deep steel studs and constructed of the materials and in the manner specified in the individual U400 Series Wall and Partition Designs in the Fire Resistance Directory. One 1-7/8 by 2-3/4 in. insert adhered to the interior back wall of the outlet box in accordance with the instructions supplied with the product. Installation to comply with Article 370-16 of the National Electrical Code (NFPA 70). When protective material is used within outlet boxes on both sides of the wall as directed, the horizontal separation between outlet boxes on opposite sides of the wall may be less than 24 in. provided that the boxes are not installed back-to-back.

SpecSeal Power Shield EP24 Box Inserts, for use with max 2-1/8 by 4 by 2-1/8 in. deep flush device UL Listed Metallic Outlet Boxes without internal clamps installed with steel mud rings and steel cover plates in 2 h fire rated gypsum wallboard wall assemblies framed with min 3-5/8 in. deep steel studs and constructed of the materials and in the manner specified in the individual U400 Series Wall and Partition Designs in the Fire Resistance Directory. One 1-7/8 by 3-3/4 in. insert adhered to the interior back wall of the outlet box in accordance with the instructions supplied with the product. Installation to comply with Article 370-16 of the National Electrical Code (NFPA 70). When protective material is used within outlet boxes on both sides of the wall as directed, the horizontal separation between outlet boxes on opposite sides of the wall may be less than 24 in. provided that the boxes are not installed back-to-back.

SpecSeal Power Shield EP44 Box Inserts, for use with max 4 by 4 by 2-1/8 in. flush device UL Listed Metallic Outlet Boxes without internal clamps installed with steel mud rings and steel cover plates in 2 h fire rated gypsum wallboard wall assemblies framed with min 3-5/8 in. deep steel studs and constructed of the materials and in the manner specified in the individual U400 Series Wall and Partition Designs in the Fire Resistance Directory. One 3-3/4 by 3-3/4 in. insert adhered to the interior back wall of the outlet box in accordance with the instructions supplied with the product. Installation to comply with Article 370-16 of the National Electrical Code (NFPA 70). When protective material is used within outlet boxes on both sides of the wall as directed, the horizontal separation between outlet boxes on opposite sides of the wall may be less than 24 in. provided that the boxes are not installed back-to-back.

SpecSeal Putty Pads, for use with max 4-11/16 by 4-11/16 in. flush device UL Listed metallic outlet boxes installed with steel cover plates in 1 and 2 h fire rated gypsum wallboard wall assemblies framed with min 3-1/2 in. deep wood or steel studs and constructed of the materials and in the manner specified in the individual U300 or U400 Series Wall and Partition Designs in the Fire Resistance Directory. Min 3/16 in. thick moldable putty pads are to be installed to completely cover the exterior surfaces of the outlet box (except for the side of the outlet box against the stud) and completely seal against the stud within the stud cavity. An additional 3/16 in. thickness of putty to be formed around the connector securing the end of each electrical metallic tube or conduit to the box. When used with metallic outlet boxes larger than 4 by 4 in., a ball of putty is to be installed to plug the open end of each electrical metallic tube or conduit within the outlet box. When max 4 by 4 in. metallic outlet boxes are used, the ball of putty in the open end of each electrical metallic tube or conduit within the outlet box is optional. When moldable putty pad outlet box protective material is used on boxes on both sides of wall as directed, the horizontal separation between outlet boxes on the opposite sides of the wall may be less than 24 in. provided that the boxes are not installed back-to-back.

SpecSeal Putty Pads for use with max 4 by 3-3/4 by 3 in. deep UL Listed Nonmetallic Outlet Boxes manufactured by Carlon Electrical Products and made from polyvinyl chloride, max 4 by 3-3/4 by 3 in. deep UL Listed Nonmetallic Outlet Boxes manufactured by Allied Moulded Products Inc. and made from fiber-reinforced thermosetting plastic or max 4-1/16 by 3-5/8 by 3-1/8 in. deep UL Listed Nonmetallic Outlet Boxes manufactured by Thomas & Betts Corp. and made from fiber-reinforced thermosetting plastic. Boxes shall also bear a 2 h rating under the “Outlet Boxes and Fittings Classified for Fire Resistance” category in the Fire Resistance Directory. Boxes installed with steel or plastic cover plates. Putty pads and boxes for use in 1 and 2 h fire rated gypsum wallboard/wood stud wall assemblies constructed of the materials and in the manner specified in the individual U300 Series Wall and Partition Designs in the Fire Resistance Directory. Outlet box secured to wood stud by means of two nailing tabs in conjunction with nails supplied with the outlet box. Min 3/16 in. thick moldable putty pads are to be installed to completely cover the exterior surfaces of the outlet box (except for the side of the outlet box against the stud) including nailing tabs and completely seal against the stud within the stud cavity. An additional 3/16 in. thickness of putty to be formed around the end of each nonmetallic sheathed cable at its connection to the box and to extend a minimum of 1 in. from the box onto the nonmetallic sheathed cable within the stud cavity. When moldable putty pad outlet box protective material is used on boxes on both sides of wall as directed, the horizontal separation between outlet boxes on opposite sides of the wall may be less than 24 in. provided that the boxes are not installed back-to-back.

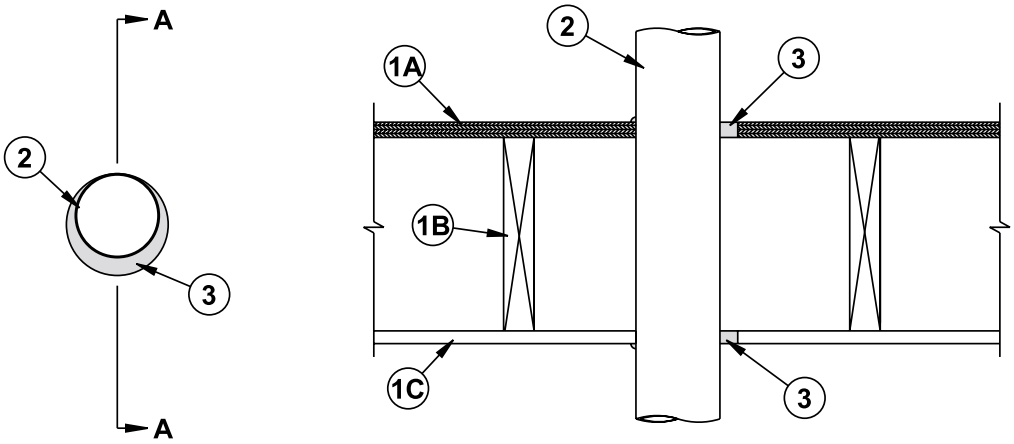

Section A-A

System No. F-C-1074
October 04, 2000
F Rating — 1 Hr
T Ratings — 1/4 and 1 Hr (See Item 2)

1. **Floor-Ceiling Assembly** — The 1 hr fire-rated wood joist floor-ceiling assembly shall be constructed of the materials and in the manner specified in the individual L500 Designs in the UL Fire Resistance Directory, as summarized below:
   A. **Flooring System** — Lumber or plywood subfloor with finish floor of lumber, plywood or **Floor Topping Mixture*** as specified in the individual Floor Ceiling Design. Max diam of opening is to be 1 in. larger than diam of pipe.
   B. **Wood Joists** — Nom 10 in. deep (or deeper) lumber, steel or combination lumber and steel joists, trusses or **Structural Wood Members*** with bridging as required and with ends firestopped.
   C. **Gypsum Board*** — Thickness, type, number of layers and fasteners as required in the individual Floor-Ceiling Design. Max diam of opening is to be 1 in. larger than diam of pipe.

1A. **Chase Wall** — (Optional, Not Shown) — The through penetrant (Item 2) may be routed through a 1 hr fire rated single, double or staggered wood stud/gypsum board chase wall. Depth of chase wall stud cavity to be min 1/2 in. greater than diameter of opening cut in sole and top plates to accommodate the through penetrant (Item 2). The chase wall shall be constructed of the materials and in the manner specified in the individual U300 Series Wall and Partition Designs in the UL Fire Resistance Directory and shall include the following construction features:
   A. **Studs** — Nom 2 by 4 in., 2 by 6 in. or double nom 2 by 4 in. lumber studs.
   B. **Sole Plate** — Nom 2 by 4 in., 2 by 6 in. or parallel 2 by 4 in. lumber plates, tightly butted. Max diam of opening is to be 1 in. larger than diam of pipe.
   C. **Top Plate** — The double top plate shall consist of two nom 2 by 4 in., two nom 2 by 6 in. or two sets of parallel 2 by 4 in. lumber plates, tightly butted. Max diam of opening is to be 1 in. larger than diam of pipe.
   D. **Gypsum Board*** — Thickness, type, number of layers and fasteners shall be as specified in the individual Wall and Partition Design.

2. **Through Penetrant** — One metallic pipe, conduit or tubing to be installed either concentrically or eccentrically within the opening. Annular space to be min 0 in. (point contact) to max 1 in. Penetrant to be rigidly supported on both sides of floor-ceiling assembly. The following types and sizes of metallic pipe, conduit or tubing may be used:
   A. **Steel Pipe** — Nom 4 in. diam (or smaller) Schedule 5 (or heavier) steel pipe.
   B. **Iron Pipe** — Nom 4 in. diam (or smaller) cast or ductile iron pipe.
   C. **Conduit** — Nom 4 in. diam (or smaller) steel conduit, steel electrical metallic tubing or flexible steel conduit.
   D. **Copper Pipe or Tube** — Nom 4 in. diam (or smaller) Regular (or heavier) copper pipe or Type L (or heavier) copper tube.

   The T Rating is 1/4 hr when copper pipe or tube is used. When steel pipe, iron pipe, steel conduit or flexible metal piping (Item 2A) is used, T Rating is 1 hr.

2A. **Through Penetrating Product*** — **Flexible Metal Piping** — As an alternate to Item 2, one nom 2 in. diam (or smaller) steel flexible metal pipe to be installed either concentrically or eccentrically within the firestop system. Annular space to be min 0 in. (point contact) to max 1 in. Penetrant to be rigidly supported on both sides of floor-ceiling assembly.

   OMEGA FLEX INC
   TITEFLEX CORP
   A BUNDY CO
   WARD MFG INC

3. **Fill, Void or Cavity Material*** — **Sealant** — Min 3/4 in. thickness of fill material applied within the annulus, flush with the top surface of the floor or sole plate. Min 5/8 in. thickness of fill material applied within the annulus, flush with bottom surface of ceiling or top plate. Min 1/4 in. diam bead of fill material applied at point contact location on the top surface of floor or sole plate and at the penetrant/ceiling or top plate interface.

   SPECIFIED TECHNOLOGIES INC — SpecSeal LCI Sealant

*Bearing the UL Classification Marking

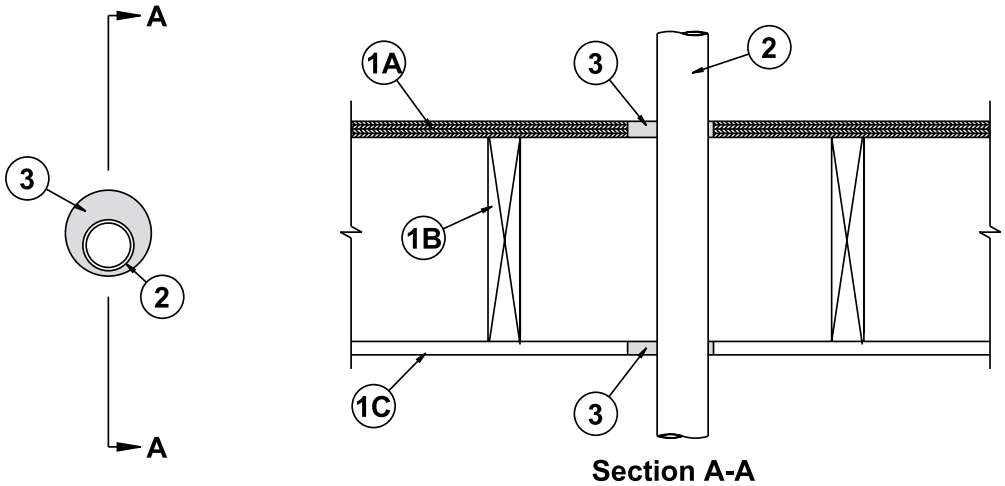

System No. F-C-2032
November 30, 2001
F Rating — 1 Hr
T Ratings — 1/4 and 1 Hr (See Item 2)

1. **Floor-Ceiling Assembly** — The 1 hr fire-rated solid or trussed lumber joist floor-ceiling assembly shall be constructed of the materials and in the manner specified in individual L500 Series Floor-Ceiling Designs in the UL Fire Resistance Directory. The general construction details of the floor-ceiling assembly are summarized below:
   A. **Flooring System** — Lumber or plywood subfloor with finish floor of lumber, plywood or **Floor Topping Mixture*** as specified in the individual Floor-Ceiling Design. Max diam of floor opening is 5 in.
   B. **Wood Joists** — Nom 2 by 10 in. lumber joists spaced 16 in. OC with nom 1 by 3 in. lumber bridging and with ends firestopped. As an alternate to lumber joists, nom 10 in. deep (or deeper) lumber, steel or combination lumber and steel joists, trusses or **Structural Wood Members*** with bridging as required and with ends firestopped.
   C. **Furring Channels** — (Not Shown) — Resilient galv steel furring installed perpendicular to wood joists (Item 1B) between gypsum board (Item 1D) and wood joists as required in the individual Floor-Ceiling Design.
   D. **Gypsum Board*** Nom 4 ft wide by 5/8 in. thick as specified in the individual Floor-Ceiling Design. Gypsum board secured to wood joists or furring channels as specified in the individual Floor-Ceiling Design. Max diam of ceiling opening is 5 in.

1.1 **Chase Wall** — (Not Shown) — When required (See table under Item 2), the through penetrant (Item 2) shall be routed through a 1 hr fire-rated single, double or staggered wood stud/gypsum board chase wall. Depth of chase wall stud cavity to be min 1/2 in. greater than diam of opening cut in sole and top plates to accommodate the through penetrant (Item 2). The chase wall shall be constructed of the materials and in the manner specified in the individual U300 Series Wall and Partition Designs in the UL Fire Resistance Directory and shall include the following construction features:
   A. **Studs** — Nom 2 by 4 in., 2 by 6 in. or double 2 by 4 in. lumber studs.
   B. **Sole Plate** — Nom 2 by 4 in., 2 by 6 in. or parallel 2 by 4 in. lumber plates, tightly butted.
   C. **Top Plate** — The double top plate shall consist of two nom 2 by 4 in. or 2 by 6 in. or two sets of parallel 2 by 4 in. lumber plates, tightly butted. Max diam of opening is 5 in.
   D. **Gypsum Board*** — Thickness, type, number of layers and fasteners shall be as specified in individual Wall and Partition Design.

The use of the chase wall is dependent upon the type of through penetrant used as specified in Item 2.

2. **Through-Penetrants** — One nonmetallic pipe, conduit or tubing to be installed within the firestop system. Diam of openings hole-sawed through flooring system and through gypsum board ceiling to be 1/2 in. to 1-5/8 in. larger than the outside diam of through-penetrant. The annular space within each opening shall be min 0 in. (point contact) to max 1-5/8 in. When vented pipe is not contained within chase wall, the annular space within each opening shall be min 1/4 in. to max 1-3/8 in. Pipe, conduit or tubing to be rigidly supported on both sides of the floor-ceiling assembly. The following types and sizes of nonmetallic pipes, conduits or tubing may be used:
   A. **Polyvinyl Chloride (PVC) Pipe** — Nom 4 in. diam (or smaller) Schedule 40 solid or cellular core PVC pipe for use in closed (process or supply) or vented (drain, waste or vent) piping systems.
   B. **Rigid Nonmetallic Conduit (RNC)+** — Nom 4 in. diam (or smaller) Schedule 40 PVC conduit installed in accordance with Article 347 of the National Electrical Code (NFPA No. 70).
   C. **Chlorinated Polyvinyl Chloride (CPVC) Pipe** — Nom 4 in. diam (or smaller) SDR 17 CPVC pipe for use in closed (process or supply) or vented (drain, waste or vent) piping systems.
   D. **Acrylonitrile Butadiene Styrene (ABS) Pipe** — Nom 4 in. diam (or smaller) Schedule 40 cellular or solid core ABS pipe for use in closed (process or supply) or vented (drain, waste or vent) piping systems.
   E. **Polybutylene (PB) Pipe** — Nom 1 in. diam (or smaller) SDR 11 PB pipe for use in closed (process or supply) piping systems.
   F. **Cross Linked Polyethylene Alumunim-Cross Linked Polyethylene (PEX AL-PEX) Tubing** — Nom 1 in. diam (or smaller) SDR 5 PEX-AL-PEX tubing for use in closed (process or supply) piping systems.
   G. **Cross Linked Polyethylene (PEX) Tubing** — Nom 1 in. diam (or smaller) SDR 9 PEX tubing for use in closed (process or supply) piping systems

(System No. F-C-2032 Continued)

H. **Electrical Nonmetallic Tubing (ENT)+** — Nom 2 in. diam (or smaller) PVC tubing installed in accordance with Article 331 of the National Electrical Code (NFPA No. 70).

The use of the chase wall (Item 1.1) is dependent upon the type and diam of through penetrant and type of piping system used as tabulated below:

Type of Through Penetrant	Max Diam of Through Penetrant In.	Type of Piping System	Use of Chase Wall
PVC pipe	4	Closed or Vented	Required
PVC pipe (a)	2	Closed or Vented	Optional
RNC	4	Not Applicable	Required
RNC	2	Not Applicable	Optional
CPVC pipe	4	Closed or Vented	Required
CPVC pipe (a)	2	Closed or Vented	Optional
ABS pipe	4	Closed or Vented	Required
PB pipe	1	Closed	Optional
PEX-AL-PEX tubing	1	Closed	Required
PEX tubing	1	Closed	Required
ENT	2	Not Applicable	Required

(a) When nom diam of pipe exceeds 1 in. and chase wall (Item 1.1) is not used , T Rating is 1/4 hr .

3. **Fill, Void or Cavity Material*** — **Sealant** — Min 3/4 in. thickness of fill material applied within annulus on top surface of floor. Min 5/8 in. thickness of fill material applied within annulus on bottom surface of ceiling or lower top plate of chase wall assembly. Additional fill material to be installed such that a min 1/8 in. crown is formed around the through penetrant on bottom surface of ceiling or lower plate of chase wall assembly.

SPECIFIED TECHNOLOGIES INC — SpecSeal 100, 101, 102, 105, 120 or 129 Sealant, SpecSeal LCI

+Bearing the UL Listing Mark

*Bearing the UL Classification Marking

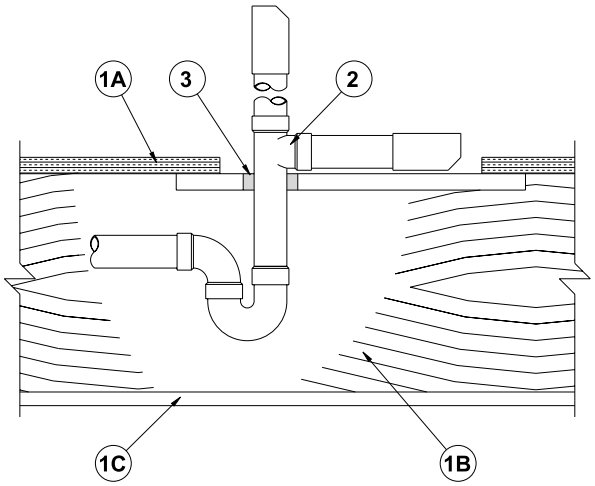

System No. F-C-2156
October 20, 2000
F Rating — 1 Hr
T Rating — 1 Hr

1. **Floor-Ceiling Assembly** — The 1 hr fire-rated solid or trussed lumber joist floor-ceiling assembly shall be constructed of the materials and in the manner specified in the individual L500 Series Floor-Ceiling Designs in the UL Fire Resistance Directory. The general construction features of the floor-ceiling assembly are summarized below:
   A. **Flooring System** — Lumber or plywood subfloor with finish floor of lumber, plywood or **Floor Topping Mixture*** as specified in the individual Floor-Ceiling Design. Rectangular cutout in flooring to accomodate the bathtub drain piping (Item 2) to be max 8 in. by 12 in. Cutout to be patched on underside of subfloor using one layer of min 3/4 in. thick plywood or min 5/8 in. thick gypsum wallboard (Item 1C) sized to lap min 2 in. beyond each edge of rectangular cutout. Diam of opening hole-sawed through patch to accomodate drain piping (Item 2) to be 1 in. larger than outside diam of drain piping and positioned such that drain piping is centered in opening. Patch split into two pieces at opening hole-sawed for bathtub drain piping. Two pieces positioned around drain piping, with cut edges tightly butted, and screw-attached to underside of subfloor with 1-1/4 in. long Type S steel screws spaced max 6 in. OC.
   B. **Wood Joists*** — Nom 10 in. deep (or deeper) lumber, steel or combination lumber and steel joists, trusses or **Structural Wood Members*** with bridging as required and with ends firestopped.
   C. **Gypsum Board*** — Nom 4 ft. wide by 5/8 in. thick, attached as described in the individual Floor-Ceiling Design.
2. **Drain Piping** — Nom 1-1/2 in. diam (or smaller) Schedule 40 cellular or solid core polyvinyl chloride (PVC) acrylonitrile butadiene styrene (ABS), or SDR17 chlorinated polyvinyl chloride (CPVC) pipe and drain fittings cemented together and provided with PVC, ABS or CPVC bathtub waste/overflow fittings. The annular space shall be a min 3/8 in. to max 5/8 in.
3. **Fill, Void or Cavity Material*** — **Sealant** — Min 5/8 in. depth of fill material applied within annular space, flush with both surfaces of plywood or gypsum wallboard patch.
   SPECIFIED TECHNOLOGIES INC — SpecSeal 100, 101, 102 or 105 Sealant, SpecSeal LCI Sealant

*Bearing the UL Classification Marking

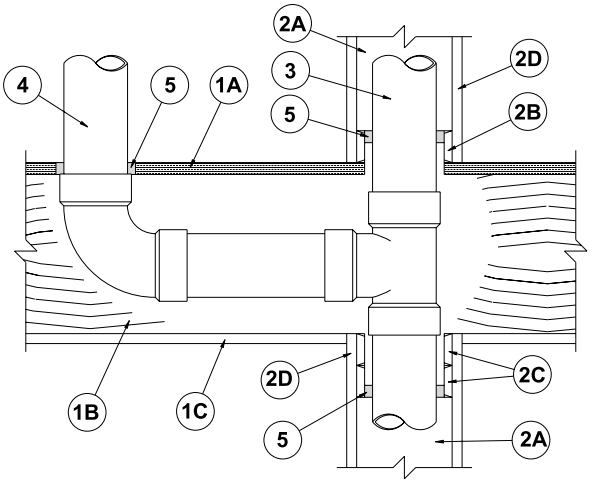

System No. F-C-2157
October 20, 2000
F Rating — 1 Hr
T Rating — 1 Hr

1. **Floor-Ceiling Assembly** — The 1 hr fire-rated solid or trussed lumber joist floor-ceiling assembly shall be constructed of the materials and in the manner specified in the individual L500 Series Floor-Ceiling Designs in the UL Fire Resistance Directory. **The F Rating of the firestop system is equal to the ratings of the floor-ceiling and wall assemblies.** The general construction features of the floor-ceiling assembly are summarized below:
   A. **Flooring System** — Lumber or plywood subfloor with finish floor of lumber, plywood or **Floor Topping Mixture*** as specified in the individual Floor-Ceiling Design. Diam of opening hole-sawed in flooring shall be 1 in. larger than diam of branch piping (Item 4).
   B. **Wood Joists*** — Nom 10 in. deep (or deeper) lumber, steel or combination lumber and steel joists, trusses or **Structural Wood Members*** with bridging as required and with ends firestopped.
   C. **Gypsum Board*** — Nom 4 ft. wide by 5/8 in. thick, attached as described in the individual Floor-Ceiling Design.
2. **Chase Wall** — The through-penetrant (Item 3) shall be routed through a 1 hr fire-rated single, double or staggered wood stud/gypsum wallboard chase wall constructed of the materials and in the manner specified in the individual U300 Series Wall and Partition Designs in the UL Fire Resistance Directory and shall include the following construction features:
   A. **Studs** — Nom 2 by 6 in. or double nom 2 by 4 in. lumber studs.
   B. **Sole Plate** — Nom 2 by 6 in. or parallel 2 by 4 in. lumber plates, tightly butted. Diam of opening cut in sole plate shall be 1/2 in. larger than diam of through penetrant (Item 3).
   C. **Top Plate** — The double top plate shall consist of two nom 2 by 6 in. or two sets of parallel 2 by 4 in. lumber plates, tightly butted. Diam of opening cut in double top plate shall be 1/2 in. larger than diam of through penetrant (Item 3).
   D. **Gypsum Board*** — Thickness, type, number of layers and fasteners shall be as specified in individual Wall or Partition Design.
3. **Through Penetrant** — One nonmetallic pipe to be installed concentrically or eccentrically within the firestop system. The annular space within the opening shall be a min 0 in. (point contact) to a max 1/2 in. The following types and sizes of nonmetallic pipes may be used:
   A. **Polyvinyl Chloride (PVC) Pipe** — Nom 4 in. diam (or smaller) Schedule 40 cellular or solid core PVC pipe for use in closed (process or supply) or vented (drain, waste or vent) piping system.
   B. **Chlorinated Polyvinyl Chloride (CPVC) Pipe** — Nom 4 in. diam (or smaller) SDR17 CPVC pipe for use in closed (process or supply) or vented (drain, waste or vent) piping system.
   C. **Acrylonitrile Butadiene Styrene (ABS) Pipe** — Nom 4 in. diam (or smaller) Schedule 40 cellular or solid core ABS pipe for use in closed (process or supply) or vented (drain, waste or vent) piping system.
4. **Branch Piping** — (Optional) — One nonmetallic pipe connected to through penetrant (Item 3) within concealed space above ceiling and centered within opening in flooring. The following types and sizes of nonmetallic pipes may be used:
   A. **Polyvinyl Chloride (PVC) Pipe** — Nom 4 in. diam (or smaller) Schedule 40 cellular or solid core PVC pipe for use in closed (process or supply) or vented (drain, waste or vent) piping system.
   B. **Chlorinated Polyvinyl Chloride (CPVC) Pipe** — Nom 4 in. diam (or smaller) SDR17 CPVC pipe for use in closed (process or supply) or vented (drain, waste or vent) piping system.
   C. **Acrylonitrile Butadiene Styrene** — Nom 4 in. diam (or smaller) Schedule 40 cellular or solid core ABS pipe for use in closed (process or supply) or vented (drain, waste or vent) piping system.
5. **Fill, Void or Cavity Material*** — **Sealant** — Min 3/4 in. thickness of fill material applied within annular space around perimeter of through penetrant (Item 3), flush with top surface of sole plate and flush with bottom surface of double top plate. Min 3/4 in. thickness of fill material applied within annular space around branch piping (Item 4), flush with top surface of flooring. At point contact locations within the chase wall assembly, apply min 1/4 in. diam bead of fill material at nonmetallic pipe/wood plate interface on top and bottom surface of chase wall assembly.

SPECIFIED TECHNOLOGIES INC — SpecSeal 100, 101, 102 or 105 Sealant, SpecSeal LCI Sealant

*Bearing the UL Classification Marking

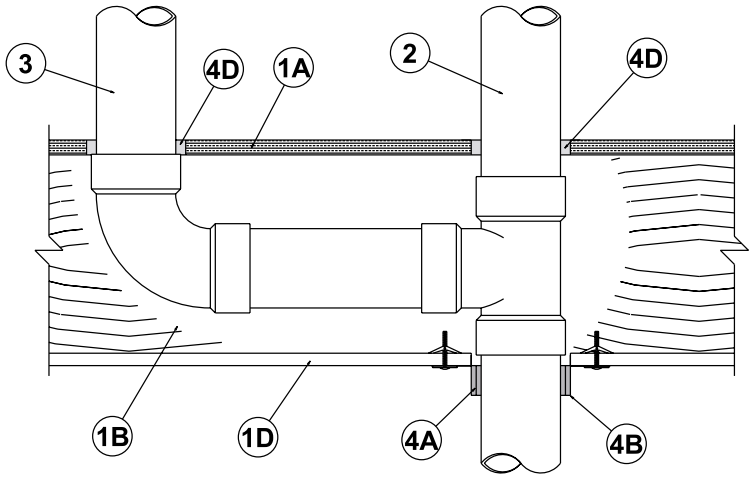

System No. F-C-2158
June 22, 2001
F Ratings — 1 and 2 Hr (See Item 1)
T Ratings — 1 and 2 Hr (See Item 1)

1. **Floor-Ceiling Assembly** — The 1 hr fire-rated solid or trussed lumber joist floor-ceiling assembly shall be constructed of the materials and in the manner specified in the individual L500 Series Floor-Ceiling Designs in the UL Fire Resistance Directory. The 2 hr fire-rated wood joist floor-ceiling assembly shall be constructed of the materials and in the manner specified in Design Nos. L505, L511 or L536 in the UL Fire Resistance Directory. **The F and T Ratings of the firestop system are equal to the rating of the floor-ceiling assembly.** The general construction features of the floor-ceiling assembly are summarized below:
   A. **Flooring System** — Lumber or plywood subfloor with finish floor of lumber, plywood or **Floor Topping Mixture*** as specified in the individual Floor-Ceiling Design. Diam of opening hole-sawed in flooring shall be 1 in. larger than diam of through penetrant (Item 3) or branch piping (Item 4).
   B. **Wood Joists*** — For 1 hr fire-rated floor-ceiling assemblies nom 10 in. deep (or deeper) lumber, steel or combination lumber and steel joists, trusses or **Structural Wood Members*** with bridging as required and with ends firestopped. For 2 hr fire-rated floor-ceiling assembly, nom 2 by 10 in. lumber joists spaced 16 in. OC with nom 1 by 3 in. lumber bridging with ends firestopped.
   C. **Furring Channels** — (Not Shown)—Resilient galv steel furring installed perpendicular to wood joists between first and second layers of wallboard (Item 1D) in 2 hr fire-rated assembly.
   D. **Gypsum Board*** — Nom 4 ft wide by 5/8 in. thick as specified in the individual Floor-Ceiling Design. First layer of wallboard nailed to wood joists. Second layer of wallboard (2 hr fire-rated assembly) screw-attached to furring channels. Diam of opening shall be max 1/4 in. larger than nom diam of through penetrant (Item 3).
2. **Chase Wall** — (Optional, Not Shown) —The through-penetrant (Item 3) may be routed through a 1 or 2 hr fire-rated single, double or staggered wood stud/gypsum wallboard chase wall constructed of the materials and in the manner specified in the individual U300 Series Wall and Partition Designs in the UL Fire Resistance Directory and which includes the following construction features:
   A. **Studs** — Nom 2 by 6 in. or double nom 2 by 4 in. lumber studs.
   B. **Sole Plate** — Nom 2 by 6 in. or parallel 2 by 4 in. lumber plates, tightly butted. Diam of opening hole-sawed in sole plate to be 1/2 in. larger than diam of through penetrant (Item 3).
   C. **Top Plate** — The double top plate shall consist of two nom 2 by 6 in. or two sets of parallel 2 by 4 in. lumber plates, tightly butted. Diam of opening shall be 1/2 in. larger than diam of through penetrant (Item 3).
   D. **Gypsum Board*** — Thickness, type, number of layers and fasteners shall be as specified in the individual Wall or Partition Design.
3. **Through Penetrant** — One nonmetallic pipe to be centered within the firestop system. Pipe to be rigidly supported on both sides of floor-ceiling assembly. The following types and sizes of nonmetallic pipes may be used:
   A. **Polyvinyl Chloride (PVC) Pipe** — Nom 4 in. diam (or smaller) Schedule 40 cellular or solid core PVC pipe for use in closed (process or supply) or vented (drain, waste or vent) piping system.
   B. **Chlorinated Polyvinyl Chloride (CPVC) Pipe** — Nom 4 in. diam (or smaller) SDR17 CPVC pipe for use in closed (process or supply) or vented (drain, waste or vent) piping system.
   C. **Acrylonitrile Butadiene Styrene (ABS) Pipe** — Nom 4 in. diam (or smaller) Schedule 40 cellular or solid core ABS pipe for use in closed (process or supply) or vented (drain, waste or vent) piping system.
4. **Branch Piping** — (Optional) — One nonmetallic pipe connected to through penetrant (Item 3) within concealed space above ceiling and centered within opening in subfloor. The following types and sizes of nonmetallic pipes may be used:
   A. **Polyvinyl Chloride (PVC) Pipe** — Nom 4 in. diam (or smaller) Schedule 40 cellular or solid core PVC pipe for use in closed (process or supply) or vented (drain, waste or vent) piping system.
   B. **Chlorinated Polyvinyl Chloride (CPVC) Pipe** — Nom 4 in. diam (or smaller) SDR17 CPVC pipe for use in closed (process or supply) or vented (drain, waste or vent) piping system.
   C. **Acrylonitrile Butadiene Styrene (ABS) Pipe** — Nom 4 in. diam (or smaller) Schedule 40 cellular or solid core ABS pipe for use in closed (process or supply) or vented (drain, waste or vent) piping system.

(System No. F-C-2158 Continued)

5. **Firestop System** — The details of the firestop system shall be as follows:
   A. **Fill, Void or Cavity Material*** — **Wrap Strip** — Nom 1/4 in. thick intumescent material faced on both sides with a plastic film, supplied in 1-1/2 in. wide strips. Nom 1-1/2 in. wide strips tightly wrapped around through penetrant (Item 3) with the edges butted against the underside of the gypsum wallboard ceiling (Item 1D) or top plate of chase wall (Item 2C) around the entire perimeter of the hole-sawed opening. For nom 1/2 in. to 2 in. diam pipes, a min of one layer of wrap strip is required. For nom 2-1/2 in. to nom 4 in. diam pipes, a min of two layers of wrap strip is required. Each layer of wrap strip to be installed with butted seams, butted seams in successive layers to be staggered or aligned. Wrap strip layer(s) secured together with masking tape.
      SPECIFIED TECHNOLOGIES INC — SpecSeal RED Wrap Strip
   B. **Steel Collar** — Collar fabricated from coils of precut 0.016 in. thick (30 MSG) galv sheet steel available from wrap strip manufacturer. Collor shall be nom 1-1/2 in. deep with 1 in. wide by 2 in. long anchor tabs for attachment to underside of ceiling or top plate. Retainer tabs, 3/4 in. wide tapering down to 1/4 in. wide and located opposite the anchor tabs, folded 90 degrees toward through penetrant surface to maintain the annular space and to retain the wrap strips. Collar wrapped around wrap strips and through-penetrant with a 1 in. wide overlap along its perimeter joint and secured with a min 1/2 in. wide by 0.028 in. thick stainless steel hose clamp at the mid-height of the steel collar. As an alternate to the steel hose clamp, the steel collar may be secured together by means of three No. 8 steel sheet metal screws. The length of the steel screws is dependent upon the number of layers of wrap strip used within the steel collar. For steel collars incorporating a single layer of wrap strip, the length of the steel screws shall be 1/4 in. long. For steel collars incorporating two or more layers of wrap strip, the length of the steel screws shall be 3/8 in. long. Collar secured to the bottom of ceiling with min 3/16 in. diam by 2 in. long toggle bolts in conjunction with min 1/4 in. by 1-1/4 in. steel fender washers. Collar secured to bottom of chase wall top plate with min 3/4 in. long steel wood screws in conjunction with min 1/4 in. by 1 in. steel fender washers, respectively. The number of screws is dependent upon the nom diam of the through penetrant. Two screws, symmetrically located, are required for nom 1/2 in. through 2 in. diam through-penetrants. Three screws, symmetrically located, are required for nom 2-1/2 in. and 3 in. diam through-penetrants. Four screws, symmetrically located, are required for nom 3-1/2 in. and 4 in. diam through-penetrants. Steel collar is not required to be installed around branch piping at the underside of the flooring.
   C. **Firestop Device*** — (Not Shown) — As an alternate to Items 5A and 5B for through-penetrant (Item 3), a firestop device consisting of a steel collar lined with intumescent material and sized to fit the specific diam of the nonmetallic pipe may be used. Firestop device to be installed on underside of ceiling or top plate in accordance with the accompanying installation instructions.
      SPECIFIED TECHNOLOGIES INC — SpecSeal Firestop Collar, SpecSeal LCC Collar
   D. **Fill, Void or Cavity Material*** — **Sealant** — Min 3/4 in. thickness of fill material applied within annular space around perimeter of through penetrant (Item 3) and branch piping (Item 4), flush with top surface of floor or top of chase wall sole plate.
      SPECIFIED TECHNOLOGIES INC — SpecSeal 100, 101, 102 or 105 Sealant, SpecSeal LCI Sealant

*Bearing the UL Classification Mark

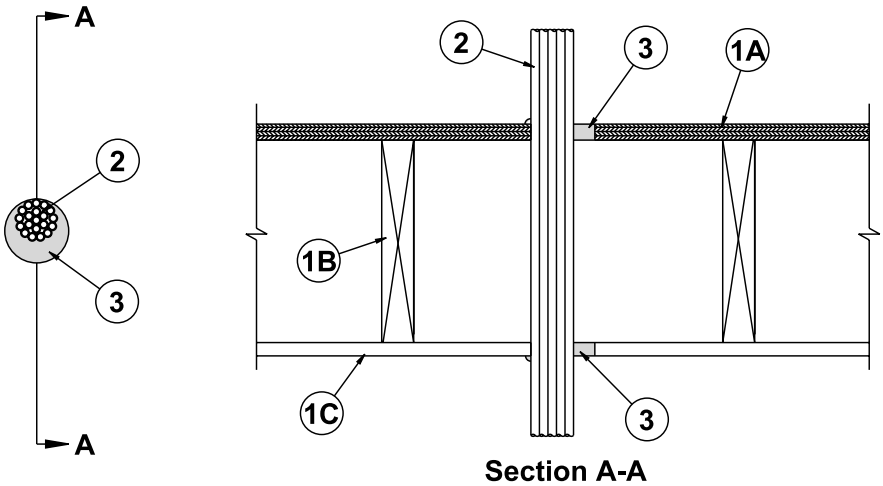

System No. F-C-3057
October 04, 2000
F Rating — 1 Hr
T Rating — 1 Hr

1. **Floor-Ceiling Assembly** — The 1 hr fire-rated wood joist floor-ceiling assembly shall be constructed of the materials and in the manner specified in the individual L500 Designs in the UL Fire Resistance Directory, as summarized below:
   A. **Flooring System** — Lumber or plywood subfloor with finish floor of lumber, plywood or **Floor Topping Mixture*** as specified in the individual Floor-Ceiling Design. Max diam of opening is 3 in.
   B. **Wood Joists** — Nom 10 in. deep (or deeper) lumber, steel or combination lumber and steel joists, trusses or **Structural Wood Members*** with bridging as required and with ends firestopped.
   C. **Gypsum Board*** — Thickness, type, number of layers and fasteners as required in the individual Floor-Ceiling Design. Max diam of opening is 3 in.

1A. **Chase Wall** — (Optional, Not Shown) — The through penetrant (Item 2) may be routed through a 1 hr fire rated single, double or staggered wood stud/gypsum board chase wall. Depth of chase wall stud cavity to be min 1/2 in. greater than diameter of opening cut in sole and top plates to accommodate the through penetrant (Item 2). The chase wall shall be constructed of the materials and in the manner specified in the individual U300 Series Wall and Partition Designs in the UL Fire Resistance Directory and shall include the following construction features:
   A. **Studs** — Nom 2 by 4 in., 2 by 6 in. or double nom 2 by 4 in. lumber studs.
   B. **Sole Plate** — Nom 2 by 4 in., 2 by 6 in. or parallel 2 by 4 in. lumber plates, tightly butted. Max diam of opening is 3 in.
   C. **Top Plate** — The double top plate shall consist of two nom 2 by 4 in., two nom 2 by 6 in. or two sets of parallel 2 by 4 in. lumber plates, tightly butted. Max diam of opening is 3 in.
   D. **Gypsum Board*** — Thickness, type, number of layers and fasteners shall be as specified in the individual Wall and Partition Design.

2. **Cables** — Aggregate cross-sectional area of cables within opening to be max 54 percent of the cross-sectional area of the opening. Annular space to be min 0 in. (point contact) to max 1-1/4 in. Penetrants to be rigidly supported on both sides of floor-ceiling assembly. The following types and sizes of cables may be used:
   A. Max 200 pair No. 24 AWG (or smaller) copper conductor telecommunication cable with PVC insulation and jacketing.
   B. Max 3/C No. 3/0 AWG (or smaller) aluminum or copper conductor SER cable with PVC insulation and jacketing.
   C. Max 3/C with ground No. 8 AWG (or smaller) Type NM (Romex) nonmetallic sheathed cable with PVC insulation and jacketing.
   D. Max 7/C No. 12 AWG (or smaller) power/control cables with PVC insulation and jacketing.
   E. Max RG/U (or smaller) copper conductor coaxial cable with fluorinated ethylene insulation and jacketing materials.
   F. Max 4 pair No. 24 AWG (or smaller) copper conductor data cable with Hylar insulation and jacketing.
   G. Max 4 pair No. 18 AWG (or smaller) copper conductor instrumentation cable with PVC insulation and jacketing.
   H. Fiber optic cable with PVC insulation and jacketing.
   I. **Through Penetrating Products*** — Max 4/C with ground No. 2/0 AWG (or smaller) aluminum or copper conductor aluminum or steel jacketed Metal-Clad+ or Armored Clad+ cable.
      AFC CABLE SYSTEMS INC

3. **Fill, Void or Cavity Material*** — **Sealant** — Min 3/4 in. thickness of fill material applied within the annulus, flush with the top surface of the floor or sole plate. Min 5/8 in. thickness of fill material applied within the annulus, flush with bottom surface of ceiling or top plate. At point contact, min 1/4 in. diam bead of fill material applied at cable bundle/subfloor or sole plate interface and at cable bundle/ceiling or top plate interface.
   SPECIFIED TECHNOLOGIES INC — SpecSeal LCI Sealant

*Bearing the UL Classification Marking

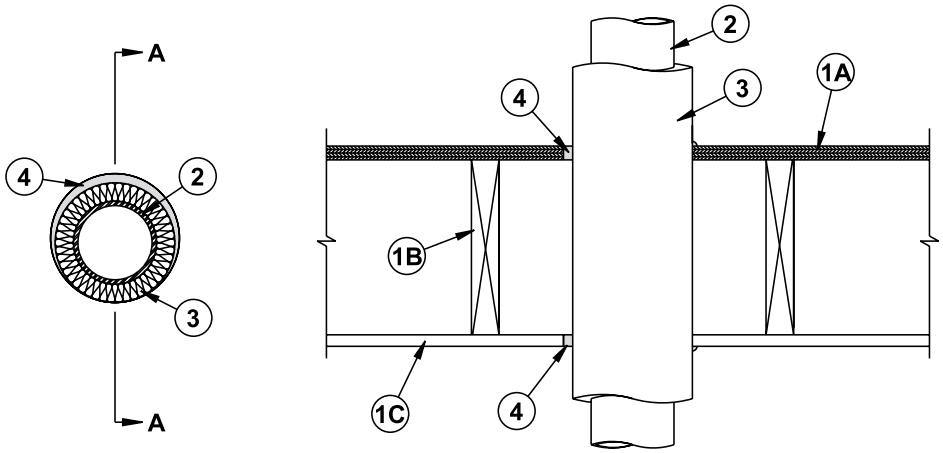

Section A-A

System No. F-C-5043
October 04, 2000
F Rating — 1 Hr
T Ratings — 3/4 and 1 Hr (See Item 3)

1. **Floor — Ceiling Assembly** — The 1 hr fire-rated wood joist floor-ceiling assembly shall be constructed of the materials and in the manner specified in the individual L500 Designs in the UL Fire Resistance Directory, as summarized below:
   A. **Flooring System** — Lumber or plywood subfloor with finish floor of lumber, plywood or **Floor Topping Mixture*** as specified in the individual Floor-Ceiling Design. Max diam of opening is to be 1 in. larger than diam of insulated metallic pipe.
   B. **Wood Joists** — Nom 10 in. deep (or deeper) lumber, steel or combination lumber and steel joists, trusses or **Structural Wood Members*** with bridging as required and with ends firestopped.
   C. **Gypsum Board*** — Thickness, type, number of layers and fasteners as required in the individual Floor-Ceiling Design. Max diam of opening is to be 1 in. larger than diam of insulated metallic pipe.

1A. **Chase Wall** — (Optional, Not Shown) — The through penetrant (Item 2) may be routed through a 1 hr fire rated single, double or staggered wood stud/gypsum board chase wall. Depth of chase wall stud cavity to be min 1/2 in. greater than diameter of opening cut in sole and top plates to accommodate the through penetrant (Item 2). The chase wall shall be constructed of the materials and in the manner specified in the individual U300 Series Wall and Partition Designs in the UL Fire Resistance Directory and shall include the following construction features:
   A. **Studs** — Nom 2 by 4 in., 2 by 6 in. or double nom 2 by 4 in. lumber studs.
   B. **Sole Plate** — Nom 2 by 4 in., 2 by 6 in. or parallel 2 by 4 in. lumber plates, tightly butted. Max diam of opening is to be 1 in. larger than diam of insulated metallic pipe.
   C. **Top Plate** — The double top plate shall consist of two nom 2 by 4 in., two nom 2 by 6 in. or two sets of parallel 2 by 4 in. lumber plates, tightly butted. Max diam of opening is to be 1 in. larger than diam of insulated metallic pipe.
   D. **Gypsum Board*** — Thickness, type, number of layers and fasteners shall be as specified in the individual Wall and Partition Design.

2. **Through Penetrants** — One metallic pipe, conduit or tubing to be installed either concentrically or eccentrically within the opening. Penetrants to be rigidly supported on both sides of floor-ceiling assembly. The following types and sizes of metallic pipe, conduits or tubing may be used:
   A. **Steel Pipe** — Nom 4 in. diam (or smaller) Schedule 5 (or heavier) steel pipe.
   B. **Iron Pipe** — Nom 4 in. diam (or smaller) cast or ductile iron pipe.
   C. **Copper Pipe or Tube** — Nom 4 in. diam (or smaller) Regular (or heavier) copper pipe or Type L (or heavier) copper tube.

3. **Pipe Covering*** — One of the following types of pipe coverings may be used:
   A. **Pipe and Equipment Covering Materials*** — Max 1 in. thick hollow cylindrical heavy density (min 3.5 pcf) glass fiber units jacketed on the outside with an all service jacket. Longitudinal joints sealed with metal fasteners or factory-applied self-sealing lap tape. Transverse joints secured with metal fasteners or butt tape supplied with the product. Annular space shall be min 0 in. (point contact) to max 1 in.
      See **Pipe and Equipment Covering Materials** (BRGU) category in the Building Materials Directory for names of manufacturers. Any pipe covering material meeting the above specifications and bearing the UL Classification Marking with a Flame Spread Index of 25 or less and a Smoke Developed Index of 50 or less may be used:
   B. **Pipe Covering Materials*** — Max 1 in. thick unfaced mineral fiber pipe insulation having a nom density of 3.5 pcf (or heavier) and sized to the outside diam of pipe or tube. Pipe insulation secured with min No. 8 AWG steel wire spaced max 12 in. OC. Annular space shall be min 0 in.
   C. **Sheathing Material*** — Used in conjunction with Item 3B. Foil-scrim-kraft or all service jacket material shall be wrapped around the outer circumference of the pipe insulation (Item 3B) with the kraft side exposed. Longitudinal joints and transverse joints sealed with metal fasteners or butt tape. Annular space shall be min 0 in. (point contact) to max 1 in.
      See **Sheathing Materials** (BVDV) category in the Building Materials Directory for names of manufacturers. Any sheathing material meeting the above specifications and bearing the UL Classification Marking with a Flame Spread Index of 25 or less and a Smoke Developed Index of 50 or less may be used.

(System No. F-C-5043 Continued)

D. **Tube Insulation** — **Plastics#** — Nom 1 in. thick acrylonitrile butadiene/polyvinyl chloride (AB/PVC) flexible foam furnished in the form of tubing. Annular space shall be min 0 in. (point contact) to max 1 in.

See **Plastics** (QMFZ2) category in the Plastics Recognized Component Directory for names of manufacturers. Any Recognized Component tube insulation meeting the above specifications and having a UL 94 Flammability Classification of 94-5VA may be used.

When Item 3A or 3B pipe covering is used, T Rating is 1 hr. When Item 3D pipe covering is used, T Rating is 3/4 hr.

4. **Fill, Void or Cavity Material*** — **Sealant** — Min 3/4 in. thickness of fill material applied within the annulus, flush with the top surface of the floor or sole plate. Min 5/8 in. thickness of fill material applied within the annulus, flush with bottom surface of ceiling or top plate. Min 1/4 in. diam bead of fill material applied at point contact location on the top surface of floor or sole plate and at the insulated metallic pipe/ceiling or top plate interface.

SPECIFIED TECHNOLOGIES INC — SpecSeal LCI Sealant

*Bearing the UL Classification Marking

#Bearing the UL Recognized Component Mark

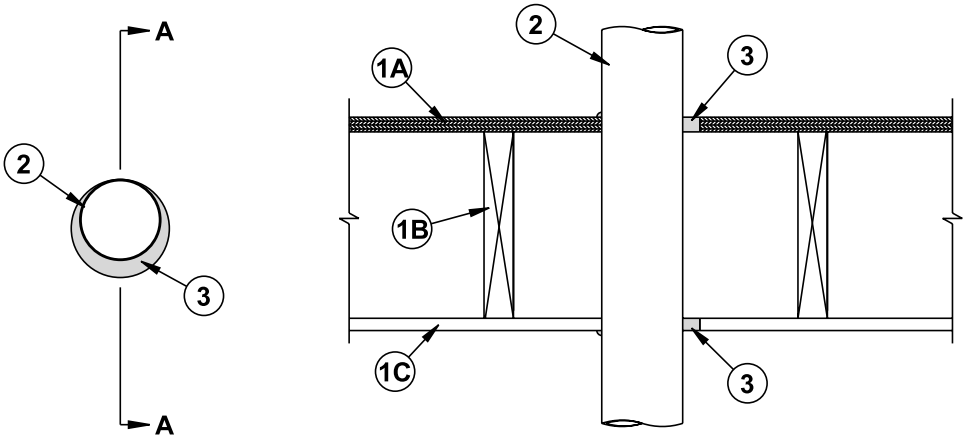

Section A-A

System No. F-C-7014
October 04, 2000
F Rating — 1 Hr
T Rating — 1 Hr

1. **Floor-Ceiling Assembly** — The 1 hr fire-rated wood joist floor-ceiling assembly shall be constructed of the materials and in the manner specified in the individual L500 Designs in the UL Fire Resistance Directory, as summarized below:
   A. **Flooring System** — Lumber or plywood subfloor with finish floor of lumber, plywood or **Floor Topping Mixture*** as specified in the individual Floor-Ceiling Design. Max diam of opening is to be 1 in. larger than diam of steel duct.
   B. **Wood Joists** — Nom 10 in. deep (or deeper) lumber, steel or combination lumber and steel joists, trusses or **Structural Wood Members*** with bridging as required and with ends firestopped.
   C. **Gypsum Board*** — Thickness, type, number of layers and fasteners as required in the individual Floor-Ceiling Design. Max diam of opening is to be 1 in. larger than diam of steel duct.

1A. **Chase Wall** — (Optional, Not Shown) — The through penetrant (Item 2) may be routed through a 1 hr fire rated single, double or staggered wood stud/gypsum board chase wall. Depth of chase wall stud cavity to be min 1/2 in. greater than diameter of opening cut in sole and top plates to accommodate the through penetrant (Item 2). The chase wall shall be constructed of the materials and in the manner specified in the individual U300 Series Wall and Partition Designs in the UL Fire Resistance Directory and shall include the following construction features:
   A. **Studs** — Nom 2 by 4 in., 2 by 6 in. or double nom 2 by 4 in. lumber studs.
   B. **Sole Plate** — Nom 2 by 4 in., 2 by 6 in. or parallel 2 by 4 in. lumber plates, tightly butted. Max diam of opening is to be 1 in. larger than diam of steel pipe.
   C. **Top Plate** — The double top plate shall consist of two nom 2 by 4 in., two nom 2 by 6 in. or two sets of parallel 2 by 4 in. lumber plates, tightly butted. Max diam of opening is to be 1 in. larger than diam of steel duct.
   D. **Gypsum Board*** — Thickness, type, number of layers and fasteners shall be as specified in the individual Wall and Partition Design.

2. **Steel Duct** — One nom 4 in. diam (or smaller) No. 30 GA (or heavier) steel duct to be installed either concentrically or eccentrically within the opening. Annular space to be min 0 in. (point contact) to max 1 in. Steel duct to be rigidly supported on both sides of floor-ceiling assembly.

3. **Fill, Void or Cavity Material*** — **Sealant** — Min 3/4 in. thickness of fill material applied within the annulus, flush with the top surface of the floor or sole plate. Min 5/8 in. thickness of fill material applied within the annulus, flush with bottom surface of ceiling or top plate. Min 1/4 in. diam bead of fill material applied at point contact location on the top surface of floor or sole plate and at the penetrant/ceiling or top plate interface.
   SPECIFIED TECHNOLOGIES INC — SpecSeal LCI Sealant

*Bearing the UL Classification Marking

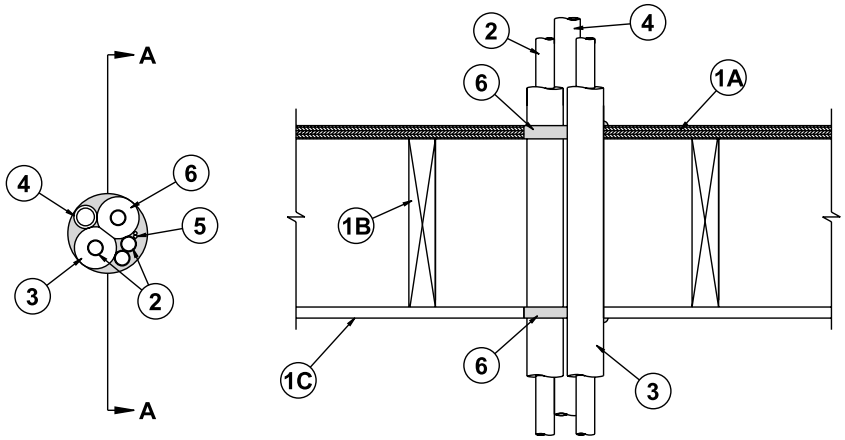

Section A-A

System No. F-C-8021
October 04, 2000
F Rating — 1 Hr
T Ratings — 1/2 and 1 Hr (See Item 2)

1. **Floor-Ceiling Assembly** — The 1 hr fire-rated wood joist floor-ceiling assembly shall be constructed of the materials and in the manner specified in the individual L500 Designs in the UL Fire Resistance Directory, as summarized below:
   A. **Flooring System** — Lumber or plywood subfloor with finish floor of lumber, plywood or **Floor Topping Mixture*** as specified in the individual Floor-Ceiling Design. Max diam of opening is 4-1/2 in.
   B. **Wood Joists** — Nom 10 in. deep (or deeper) lumber, steel or combination lumber and steel joists, trusses or **Structural Wood Members*** with bridging as required and with ends firestopped.
   C. **Gypsum Board*** — Thickness, type, number of layers and fasteners as required in the individual Floor-Ceiling Design. Max diam of opening is 4-1/2 in.

1A. **Chase Wall** — (Optional, Not Shown) — The through penetrant (Item 2) may be routed through a 1 hr fire rated single, double or staggered wood stud/gypsum board chase wall. Depth of chase wall stud cavity to be min 1/2 in. greater than diameter of opening cut in sole and top plates to accommodate the through penetrant (Item 2). The chase wall shall be constructed of the materials and in the manner specified in the individual U300 Series Wall and Partition Designs in the UL Fire Resistance Directory and shall include the following construction features:
   A. **Studs** — Nom 2 by 4 in., 2 by 6 in. or double nom 2 by 4 in. lumber studs.
   B. **Sole Plate** — Nom 2 by 4 in., 2 by 6 in. or parallel 2 by 4 in. lumber plates, tightly butted. Max diam of opening is 4-1/2 in.
   C. **Top Plate** — The double top plate shall consist of two nom 2 by 4 in., two nom 2 by 6 in. or two sets of parallel 2 by 4 in. lumber plates, tightly butted. Max diam of opening is 4-1/2 in.
   D. **Gypsum Board*** — Thickness, type, number of layers and fasteners shall be as specified in the individual Wall and Partition Design.

2. **Through Penetrants** — One or more metallic pipes, conduits or tubing to be installed either concentrically or eccentrically within the opening. Pipes, conduits or tubing to be spaced min 0 in. (point contact) to max 1 in. apart. The space between the pipes, conduits or tubing and the periphery of the opening shall be min 0 in. (point contact) to max 1 in. Penetrants to be rigidly supported on both sides of floor-ceiling assembly. The following types and sizes of metallic pipe, conduits or tubing may be used:
   A. **Steel Pipe** — Nom 3/4 in. diam (or smaller) Schedule 5 (or heavier) steel pipe.
   B. **Iron Pipe** — Nom 3/4 in. diam (or smaller) cast or ductile iron pipe.
   C. **Conduit** — Nom 3/4 in. diam (or smaller) steel conduit or steel electrical metallic tubing.
   D. **Copper Pipe or Tube** — Nom 3/4 in. diam (or smaller) Regular (or heavier) copper pipe or Type L (or heavier) copper tube.

   When metallic pipe, conduit or tubing without insulation is used, T Rating is 1/2 hr. Otherwise, T Rating is 1 hr.

3. **Tube Insulation** — **Plastics#** — Nom 1 in. thick acrylonitrile butadiene/polyvinyl chloride (AB/PVC) flexible foam furnished in the form of tubing. Tube insulation to be installed on a max of two metallic pipes or tubes. Insulated pipe or tubing to be spaced 0 in. (point contact) to 1 in. from other through penetrants (Items 2, 4 and 5). The space between the insulated pipe or tube and the periphery of the opening shall be min 0 in. (point contact) to max 1 in.

   See **Plastics** (QMFZ2) category in the Plastics Recognized Component Directory for names of manufacturers. Any Recognized Component tube insulation meeting the above specifications and having a UL 94 Flammability Classification of 94-5VA may be used.

4. **Nonmetallic Through Penetrant** — One nonmetallic pipe, conduit or tube to be installed within the firestop system. Pipe, conduit or tube to be spaced min 0 in. (point contact) to max 1 in. from the insulated through penetrants and min 1/2 in. to max 1 in. from non-insulated through penetrants. The space between the pipe, conduit or tube and the periphery of the opening shall be min 0 in. (point contact) to max 1 in. Pipe, conduit or tube to be rigidly supported on both sides of floor-ceiling assembly. One of the following types and sizes of nonmetallic through penetrants may be used:

(System No. F-C-8021 Continued)

A. **Polyvinyl Chloride (PVC) Pipe** — Nom 1-1/4 in. diam (or smaller) Schedule 40 PVC pipe for use in vented (drain, waste or vent) or closed (process or supply).
B. **Chlorinated Polyvinyl (CPVC) Pipe** — Nom 1-1/4 in. diam (or smaller) SDR17 CPVC pipe for use in vented (drain, waste or vent) or closed (process or supply).
C. **Rigid Nonmetallic Conduit+** — Nom 1-1/4 in. diam (or smaller) PVC conduit installed in accordance with Article 347 of the National Electrical Code (NFPA 70).
D. **Electrical Nonmetallic Tubing (ENT)** — Nom 1-1/4 in. diam (or smaller) PVC tubing installed in accordance with Article 331 of the National Electrical Code (NFPA 70).
E. **Cross Linked Polyethylene (PEX) Tubing** — Nom 1 in. diam (or smaller) SDR9 PEX tubing for use in closed (process or supply) piping systems.

5. **Cables** — Max two 4 pair No. 18 AWG (or smaller) cables with PVC insulation and jacketing. Cables to be spaced min 0 in. (point contact) to max 1 in. from the other through penetrants. The space between the cables and the periphery of the opening shall be min 0 in. (point contact) to max 1 in. Cables to be rigidly supported on both sides of the floor-ceiling assembly.
6. **Fill, Void or Cavity Material*** — **Sealant** — Min 3/4 in. thickness of fill material applied within the annulus, flush with the top surface of the floor or sole plate. Min 5/8 in. thickness of fill material applied within the annulus, flush with bottom surface of ceiling or top plate. Additional fill material forced into grouped penetrant interstices to max extent possible. At point contact locations, min 1/4 in. diam bead of fill material applied at grouped penetrant bundle/subfloor or sole plate interface and at grouped penetrant bundle/ceiling or top plate interface.

SPECIFIED TECHNOLOGIES INC — SpecSeal LCI Sealant

*Bearing the UL Classification Marking
#Bearing the UL Recognized Component Mark

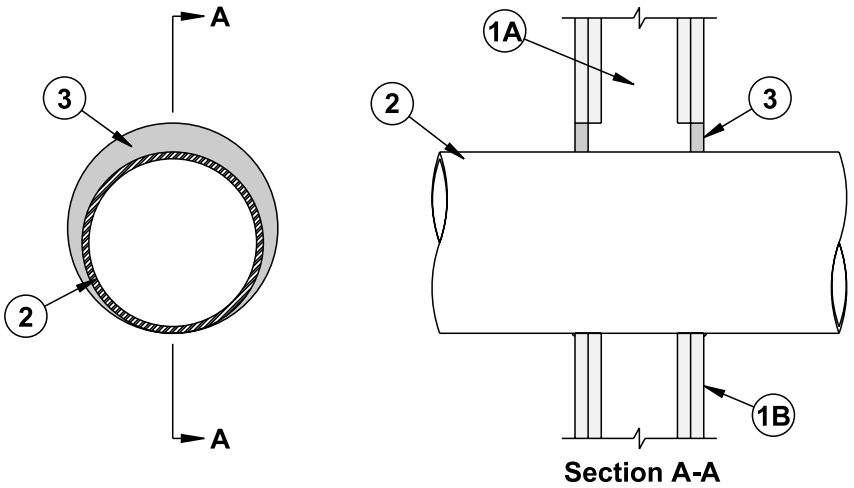

System No. W-L-1222
October 04, 2000
F Ratings — 1 and 2 Hr (See Item 1)
T Ratings — 1/4, 3/4 and 1 Hr (See Item 2)

1. **Wall Assembly** — The 1 or 2 hr fire-rated gypsum board/stud wall assembly shall be constructed of the materials and in the manner specified in the individual U300 or U400 Series Wall or Partition Design in the UL Fire Resistance Directory and shall include the following construction features:
   A. **Studs** — Wall framing may consist of either wood studs or steel channel studs. Wood studs to consist of nom 2 by 4 in. lumber spaced 16 in. OC. Steel studs to be min 3-5/8 in. wide and spaced max 24 in. OC.
   B. **Gypsum Board*** — Thickness, type, number of layers and fasteners as specified in the individual Wall and Partition Design. Max diam of opening is 10-5/8 in.

   The hourly F Rating of the firestop system is equal to the hourly fire rating of the wall assembly in which it is installed.
2. **Through Penetrant** — One metallic pipe, conduit or tube to be installed eccentrically or concentrically within the firestop system. The annular space between the pipe, conduit or tube and the periphery of the opening shall be min 0 in. (point contact) to max 2 in. Pipe, conduit or tube to be rigidly supported on both sides of the wall assembly. The following types and sizes of metallic pipes, conduits and tubes may be used:
   A. **Steel Pipe** — Nom 8 in. diam (or smaller) Schedule 5 (or heavier) steel pipe.
   B. **Iron Pipe** — Nom 8 in. diam (or smaller) cast or ductile iron pipe.
   C. **Conduit** — Nom 6 in. diam (or smaller) rigid steel conduit, nom 4 in. diam (or smaller) steel electrical metallic tubing (EMT) or nom 4 in. diam (or smaller) flexible steel conduit.
   D. **Copper Pipe** — Nom 4 in. diam (or smaller) Regular (or heavier) copper pipe.
   E. **Copper Tube** — Nom 4 in. diam (or smaller) Type L (or heavier) copper tube.

Type of Penetrant	Max Diam	T Rating
Steel or iron pipe, steel conduit or EMT	2 in.	1 hr
Steel or iron pipe, steel conduit or EMT	8 in.	3/4 hr
Copper pipe or tube	4 in.	1/4 hr

2A. **Through Penetrating Product*** — **Flexible Metal Piping** — As an alternate to Item 2, one nom 1-1/4 in. diam (or smaller) steel flexible metal pipe to be installed either concentrically or eccentrically within the firestop system. The annular space between the pipe and the periphery of the opening shall be min 0 in. (point contact) to max 2 in. Pipe to be rigidly supported on both sides of the wall assembly.

   OMEGA FLEX INC
   TITEFLEX CORP
   A BUNDY CO
   WARD MFG INC

3. **Fill, Void or Cavity Material*** — **Sealant** — Min 5/8 in. thickness of fill material applied within annulus, flush with both surfaces of wall assembly. At point contact location, min 1/4 in. diam bead of fill material applied at metallic pipe/gypsum board interface on both surfaces of wall.

   SPECIFIED TECHNOLOGIES INC — SpecSeal LCI Sealant

*Bearing the UL Classification Marking

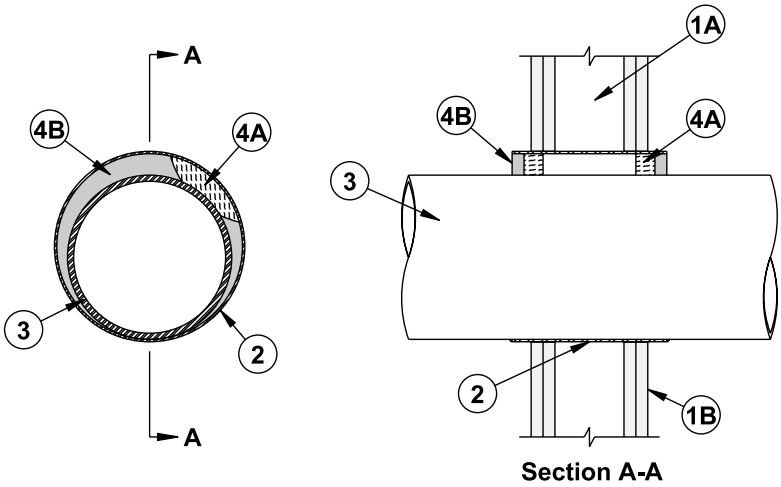

System No. W-L-1223
October 04, 2000
F Ratings — 1 and 2 Hr
T Ratings — 1/4, 3/4 and 1 Hr (See Item 3)

1. **Wall Assembly** — The 1 or 2 hr fire-rated gypsum board/stud wall assembly shall be constructed of the materials and in the manner specified in the individual U300 or U400 Series Wall or Partition Design in the UL Fire Resistance Directory and shall include the following construction features:
   A. **Studs** — Wall framing may consist of either wood studs or steel channel studs. Wood studs to consist of nom 2 by 4 in. lumber spaced 16 in. OC. Steel studs to be min 3-5/8 in. wide and spaced max 24 in. OC.
   B. **Gypsum Board*** — Thickness, type, number of layers and fasteners as specified in the individual Wall and Partition Design. Max diam of opening is 10-5/8 in.

   The hourly F Rating of the firestop system is equal to the hourly fire rating of the wall assembly in which it is installed.
2. **Steel Sleeve** — Cylindrical sleeve fabricated from 0.0125 in. thick (30 gauge) galv sheet steel and having a min 2 in. lap along the longitudinal seam. Length of the sleeve to be equal to or max 2 in. greater than the thickness of the wall. Sleeve installed by coiling the sheet steel to a diam smaller than the through opening, inserting the coil through the opening and releasing the coil to let it uncoil against the circular cutouts in the gypsum board layers. The ends of the steel sleeve shall be flush with or extend a max 1 in. beyond each surface of the wall.

   As an alternate, steel sleeve may consist of nom 10 in. diam (or smaller) Schedule 5 (or heavier) steel pipe sleeve friction-fitted into circular cutouts in the gypsum board layers. The ends of the steel sleeve shall be flush with or extend a max 1 in. beyond each surface of the wall.
3. **Through Penetrant** — One metallic pipe, conduit or tube to be installed eccentrically or concentrically within the firestop system. The annular space between the pipe, conduit or tube and the steel sleeve shall be min 0 in. (point contact) to max 2 in. Pipe, conduit or tube to be rigidly supported on both sides of the wall assembly. The following types and sizes of metallic pipes, conduits and tubes may be used:
   A. **Steel Pipe** — Nom 8 in. diam (or smaller) Schedule 5 (or heavier) steel pipe.
   B. **Iron Pipe** — Nom 8 in. diam (or smaller) cast or ductile iron pipe.
   C. **Conduit** — Nom 6 in. diam (or smaller) rigid steel conduit, nom 4 in. diam (or smaller) steel electrical metallic tubing (EMT) or nom 4 in. diam (or smaller) flexible steel conduit.
   D. **Copper Pipe** — Nom 4 in. diam (or smaller) Regular (or heavier) copper pipe.
   E. **Copper Tube** — Nom 4 in. diam (or smaller) Type L (or heavier) copper tube.

Type of Penetrant	Max Diam	T Rating
Steel or iron pipe, steel conduit or EMT	2 in.	1 hr
Steel or iron pipe, steel conduit or EMT	8 in.	3/4 hr
Copper pipe or tube	4 in.	1/4 hr

3A. **Through Penetrating Product*** — **Flexible Metal Piping** — As an alternate to Item 3, one nom 2 in. diam (or smaller) steel flexible metal pipe to be installed either concentrically or eccentrically within the firestop system. The annular space between the pipe, conduit or tube and the steel sleeve shall be min 0 in. (point contact) to max 2 in. Pipe to be rigidly supported on both sides of the wall assembly. **When flexible metal piping is used, T Rating is 1 hr.**

   OMEGA FLEX INC
   TITEFLEX CORP
   A BUNDY CO
   WARD MFG INC

4. **Packing Material** — Min 1 in. thickness of min 4 pcf mineral wool batt insulation compressed and tightly packed into each end of steel sleeve. Packing material recessed from each end of steel sleeve. When alternate steel pipe sleeve is used, packing material may be omitted from the firestop system.
   A. **Packing Material** — Min 1 in. thickness of min 4 pcf mineral wool batt insulation compressed and tightly packed into each end of steel sleeve. Packing material recessed from each end of steel sleeve. When alternate steel pipe sleeve is used, packing material may be omitted from the firestop system.
   B. **Fill, Void or Cavity Material*** — **Sealant** — Min 5/8 in. thickness of fill material applied within annulus, flush with each end of steel sleeve. At point contact location, min 1/4 in. diam bead of fill material applied at metallic pipe/steel sleeve interface on both surfaces of wall. Optionally, a min 1/4 in. diam bead of fill material shall be applied around the circumference of the steel sleeve at its egress from each side of the wall.

      SPECIFIED TECHNOLOGIES INC — SpecSeal LCI Sealant

*Bearing the UL Classification Marking

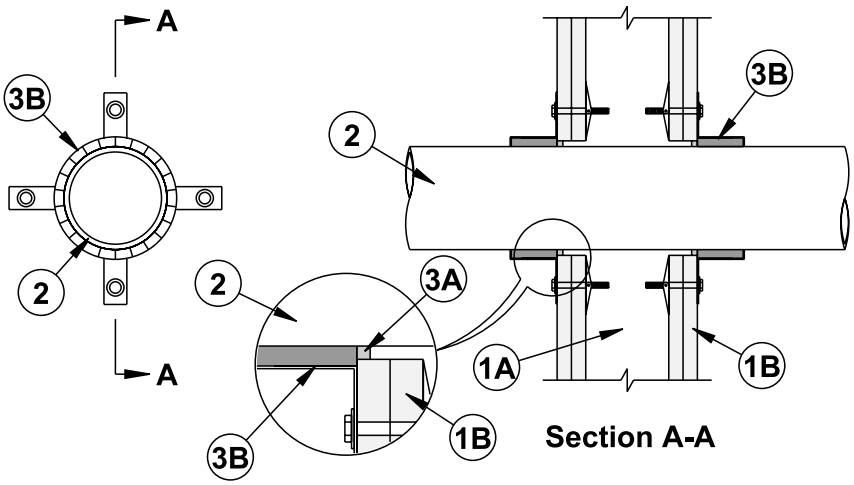

System No. W-L-2237
October 13, 2000
F Ratings — 1 and 2 Hr (See Item 1)
T Ratings — 1 and 2 Hr (See Item 1)

1. **Wall Assembly** — The 1 or 2 hr fire-rated gypsum wallboard/stud wall assembly shall be constructed of the materials and in the manner specified in the individual U300 or U400 Series Wall and Partition Designs in the UL Fire Resistance Directory and shall incorporate the following construction features:
   A. **Studs** — Wall framing may consist of either wood studs or steel channel studs. Wood studs to consist of nom 2 by 4 in. lumber spaced 16 in. OC. Steel studs to be min 3-5/8 in. wide and spaced max 24 in. OC.
   B. **Gypsum Board*** — Thickness, type, number of layers and fasteners as required in the individual Wall and Partition Designs. For nom 2-1/2 in. diam and smaller pipes and conduits, diam of opening shall be max 1/4 in. larger than nom pipe diam. For pipes and conduits greater than nom 2-1/2 in. diam of opening shall be max 1/2 in. larger than nom pipe diam.

   The hourly F and T Ratings of the firestop system are equal to the hourly fire rating of the wall assembly in which it is installed.
2. **Through Penetrants** — One nonmetallic pipe or conduit to be centered within opening with a max annular space between pipe or conduit and periphery of 1/8 in. for nom 2-1/2 in. diam and smaller pipes and conduits and 1/4 in. for pipes and conduits greater than 2-1/2 in. diam. Pipe or conduit to be rigidly supported on both sides of the wall assembly. The following types and sizes of nonmetallic pipes and conduits may be used.
   A. **Polyvinyl Chloride (PVC) Pipe** — Nom 4 in. diam (or smaller) Schedule 40 solid or cellular core PVC pipe for use in closed (process or supply) or vented (drain, waste or vent) piping systems.
   B. **Chlorinated Polyvinyl Chloride (CPVC) Pipe** — Nom 4 in. diam (or smaller) SDR17 CPVC pipe for use in closed (process or supply) or vented (drain, waste or vent) piping systems.
   C. **Acrylonitrile Butadiene Styrene (ABS) Pipe** — Nom 4 in. diam (or smaller) Schedule 40 solid or cellular core ABS pipe for use in closed (process or supply) or vented (drain, waste or vent) piping systems.
   D. **Rigid Nonmetallic Conduit+** — Nom 4 in. diam (or smaller) Schedule 40 PVC conduit installed in accordance with Article 347 of the National Electrical Code (NFPA 70).
3. **Firestop System** — The firestop system consists of the following:
   A. **Fill, Void or Cavity Material*** — **Sealant** — Min 1/4 in. thickness applied within annulus, flush with both surfaces of wall.
      SPECIFIED TECHNOLOGIES INC — SpecSeal LCI Sealant
   B. **Firestop Device*** — Galv steel collar lined with an intumescent material sized to fit the specific diam of the through penetrant. Device shall be installed around through penetrant in accordance with the accompanying installation instructions. Device incorporates anchor tabs for securement to both surfaces of wall assembly by means of 3/16 in. diam steel toggle bolts in conjunction with min 1-1/4 in. diam steel fender washers.
      SPECIFIED TECHNOLOGIES INC — SpecSeal LCC Collar

*Bearing the UL Classification Marking
+Bearing the UL Listing Mark

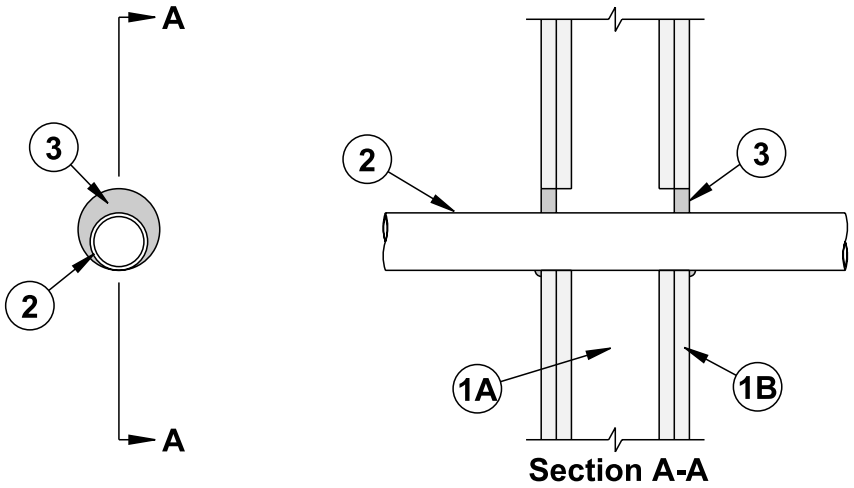

System No. W-L-2241
October 04, 2000
F Ratings — 1 and 2 Hr (See Item 1)
T Ratings — 0, 1/4, 1 and 1-3/4 Hr (See Item 2)

1. **Wall Assembly** — The 1 or 2 hr fire-rated gypsum board/stud wall assembly shall be constructed of the materials and in the manner specified in the individual U300 or U400 Series Wall or Partition Design in the UL Fire Resistance Directory and shall include the following construction features:
   A. **Studs** — Wall framing may consist of either wood studs or steel channel studs. Wood studs to consist of nom 2 by 4 in. lumber spaced 16 in. OC. Steel studs to be min 3-5/8 in. wide and spaced max 24 in. OC.
   B. **Gypsum Board*** — Thickness, type, number of layers and fasteners as specified in the individual Wall and Partition Design. Max diam of opening is 3-3/8 in.

   The hourly F Rating of the firestop system is equal to the hourly fire rating of the wall assembly in which it is installed.
2. **Through Penetrant** — One nonmetallic pipe, conduit or tube to be installed eccentrically or concentrically within the firestop system. Pipe, conduit or tube to be rigidly supported on both sides of the wall assembly. The following types and sizes of nonmetallic pipes, conduits and tubes may be used:
   A. **Polyvinyl Chloride (PVC) Pipe** — Nom 2 in. diam (or smaller) Schedule 40 solid or cellular core PVC pipe for use in closed (process or supply) or vented (drain, waste or vent) piping systems. Annular space shall be min 0 in. (point contact) to max 1 in.
   B. **Chlorinated Polyvinyl Chloride (CPVC) Pipe** — Nom 2 in. diam (or smaller) SDR17 CPVC pipe for use in closed (process or supply) or vented (drain, waste or vent) piping systems. Annular space shall be min 0 in. (point contact) to max 1 in.
   C. **Rigid Nonmetallic Conduit+** — Nom 2 in. diam (or smaller) Schedule 40 PVC conduit installed in accordance with Article 347 of the National Electrical Code (NFPA 70). Annular space shall be min 0 in. (point contact) to max 1 in.
   D. **Electrical Nonmetallic Tubing+** — Nom 2 in. diam (or smaller) PVC tubing installed in accordance with Article 331 of the National Electrical Code (NFPA 70). Annular space shall be min 0 in. (point contact) to max 1 in.
   E. **Cross Linked Polyethylene (PEX) Tubing** — Nom 1 in. diam (or smaller) SDR9 PEX tubing for use in closed (process or supply) piping systems. Annular space shall be min 0 in. (point contact) to max 1 in.
   F. **Acrylonitrile Butadiene Styrene (ABS) Pipe** — Nom 1-1/2 in. diam (or smaller) Schedule 40 solid-core or cellular core ABS pipe for use in closed (process or supply) or vented (drain, waste or vent) piping systems. Annular space shall be min 1/4 in. to max 3/4 in.

   When Item 2A or 2B is used, the T Rating is 1/4 hr. When Item 2C, 2D, or 2E is used, the T Rating is 1 hr and 1-3/4 hr for 1 hr and 2 hr fire rated walls, respectively. When Item 2F is used, T Rating is 0 hr.
3. **Fill, Void or Cavity Material*** — **Sealant** — Min 5/8 in. thickness of fill material applied within annulus, flush with both surfaces of wall assembly. At point contact location, min 1/4 in. diam bead of fill material applied at nonmetallic pipe/gypsum board interface on both surfaces of wall.

   SPECIFIED TECHNOLOGIES INC — SpecSeal LCI Sealant

*Bearing the UL Classification Marking

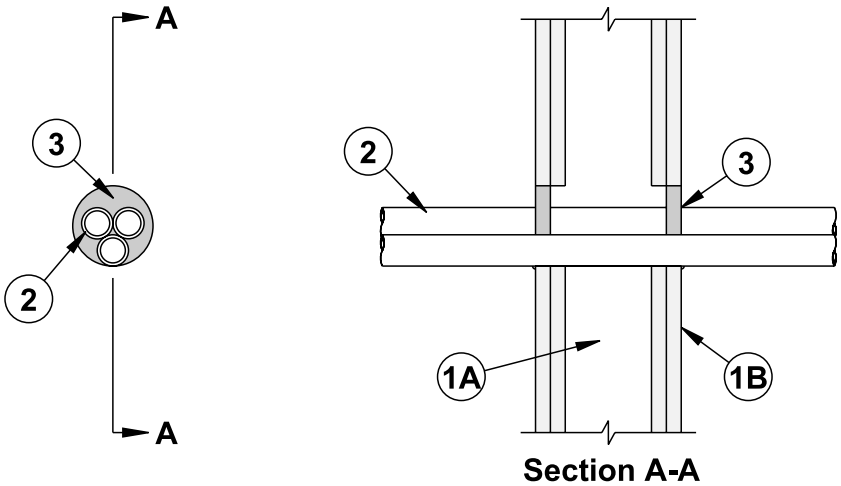

System No. W-L-2242
October 04, 2000
F Ratings — 1 and 2 Hr (See Item 1)
T Ratings — 1 and 1-3/4 Hr (See Item 2)

1. **Wall Assembly** — The 1 or 2 hr fire-rated gypsum board/stud wall assembly shall be constructed of the materials and in the manner specified in the individual U300 or U400 Series Wall or Partition Design in the UL Fire Resistance Directory and shall include the following construction features:
   A. **Studs** — Wall framing may consist of either wood studs or steel channel studs. Wood studs to consist of nom 2 by 4 in. lumber spaced 16 in. OC. Steel studs to be min 3-5/8 in. wide and spaced max 24 in. OC.
   B. **Gypsum Board*** — Thickness, type, number of layers and fasteners as specified in the individual Wall and Partition Design. Max diam of opening is 3 in.

   The hourly F Rating of the firestop system is equal to the hourly fire rating of the wall assembly in which it is installed.
2. **Through Penetrant** — One to three nonmetallic pipes, conduits or tubes to be bundled together and installed eccentrically or concentrically within the firestop system. The annular space between the grounded pipes, conduits or tubes and the periphery of the opening shall be min 0 in. (point contact) to max 1 in. Separation between pipes, conduits or tubes to be min 0 in. (point contact) to max 1 in. Pipes, conduits or tubes to be rigidly supported on both sides of the wall assembly. The following types and sizes of nonmetallic pipes, conduits and tubes may be used:
   A. **Polyvinyl Chloride (PVC) Pipe** — Nom 1 in. diam (or smaller) Schedule 40 solid or cellular core PVC pipe for use in closed (process or supply) piping systems.
   B. **Chlorinated Polyvinyl Chloride (CPVC) Pipe** — Nom 1 in. diam (or smaller) SDR17 CPVC pipe for use in closed (process or supply) piping systems.
   C. **Rigid Nonmetallic Conduit+** — Nom 1 in. diam (or smaller) Schedule 40 PVC conduit installed in accordance with Article 347 of the National Electrical Code (NFPA 70).
   D. **Electrical Nonmetallic Tubing+** — Nom 1 in. diam (or smaller) PVC tubing installed in accordance with Article 331 of the National Electrical Code (NFPA 70).
   E. **Cross Linked Polyethylene (PEX) Tubing** — Nom 1 in. diam (or smaller) SDR9 PEX tubing for use in closed (process or supply) piping systems.

   The T Rating is 1 hr and 1-3/4 hr for 1 hr and 2 hr fire rated walls, respectively.
3. **Fill, Void or Cavity Material*** — **Sealant** — Min 5/8 in. thickness of fill material applied within annulus, flush with both surfaces of wall assembly. Sealant to be forced into interstices between penetrants to max extent possible. At point contact location, min 1/4 in. diam bead of fill material applied at nonmetallic pipe/gypsum board interface on both surfaces of wall.

   SPECIFIED TECHNOLOGIES INC — SpecSeal LCI Sealant

*Bearing the UL Classification Marking

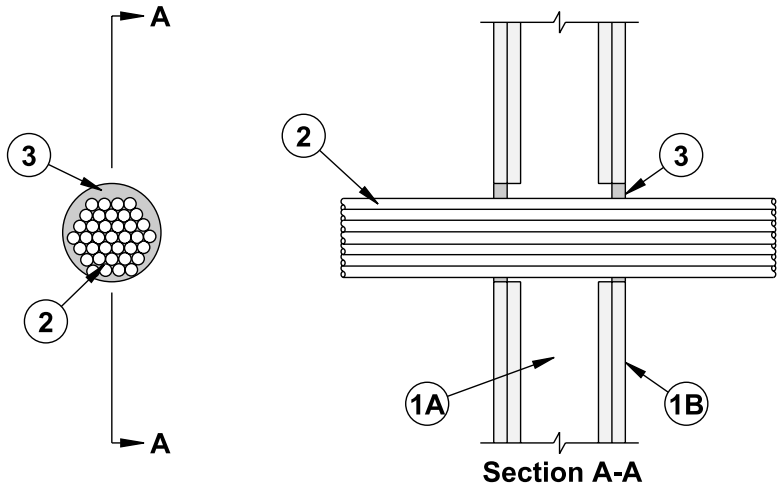

System No. W-L-3169
October 04, 2000
F Ratings — 1 and 2 Hr (See Item 1)
T Ratings — 1/4 and 3/4 Hr (See Item 2A)

1. **Wall Assembly** — The 1 or 2 hr fire-rated gypsum board/stud wall assembly shall be constructed of the materials and in the manner specified in the individual U300 or U400 Series Wall or Partition Design in the UL Fire Resistance Directory and shall include the following construction features:
   A. **Studs** — Wall framing may consist of either wood studs or steel channel studs. Wood studs to consist of nom 2 by 4 in. lumber spaced 16 in. OC. Steel studs to be min 3-5/8 in. wide and spaced max 24 in. OC.
   B. **Gypsum Board*** — Thickness, type, number of layers and fasteners as specified in the individual Wall and Partition Design. Max diam of opening is 5 in.

   The hourly F Rating of the firestop system is equal to the hourly fire rating of the wall assembly in which it is installed.
2. **Cables** — Max 4-1/2 in. diam tight bundle of cables to be installed eccentrically or concentrically within the opening. The annular space between the cables and the periphery of the opening shall be min 0 in. (point contact) to max 1/2 in. Cable bundle to be rigidly supported on both sides of the floor or wall assembly. The following types and sizes of cables may be used:
   A. Max 200 pair No. 24 AWG (or smaller) copper conductor with polyvinyl chloride (PVC) insulation and jacketing material.
   B. Max 1/C No. 350 kcmil (or smaller) copper conductor cable with cross-linked polyethylene (XLPE) jacket.
   C. Max 7/C No. 12 AWG (or smaller) copper conductor power and control cables with XLPE or PVC insulation with XLPE or PVC jacket.
   D. Max 3/C No. 2/0 AWG (or smaller) copper or aluminum conductor SER cables with PVC insulation and jacket.
   E. Max 3/C No. 2/0 AWG (or smaller) copper conductor PVC jacketed aluminum clad or steel clad TEK cable.
   F. Max 110/125 fiber optic (F.O.) cable with PVC insulation and jacket.
   G. Max 3/C with ground No. 8 AWG (or smaller) copper conductor NM cable (Romex) with PVC insulation and jacket.
   H. Max RG/U coaxial cable with fluorinated ethylene insulation and jacket.
   I. Max 4 pair No. 24 AWG (or smaller) copper conductor data cable with Hylar jacket and insulation.

2A. **Through Penetrating Product*** — As an alternate to the cables (Item 2), max 4 in. diam tight bundle of max 4/C No. 2/0 AWG (or smaller) aluminum or steel **Armored Cable+** or **Metal Clad Cable+** installed within the opening. Annular space between through-penetrating products and periphery of opening to be min 0 in. (point contact) to max 1 in. Through penetrating product rigidly supported on both sides of floor or wall assembly. **When Armored Cable or Metal Clad Cable is used, T Rating is 1/4 hr.**

   AFC CABLE SYSTEMS INC

3. **Fill, Void or Cavity Material*** — **Sealant** — Min 5/8 in. thickness of fill material applied within annulus, flush with both surfaces of wall assembly. Sealant to be forced into interstices of cable bundle to max extent possible. At point contact location, min 1/4 in. diam bead of fill material applied at cable bundle/gypsum board interface on both surfaces of wall.

   SPECIFIED TECHNOLOGIES INC — SpecSeal LCI Sealant

*Bearing the UL Classification Marking

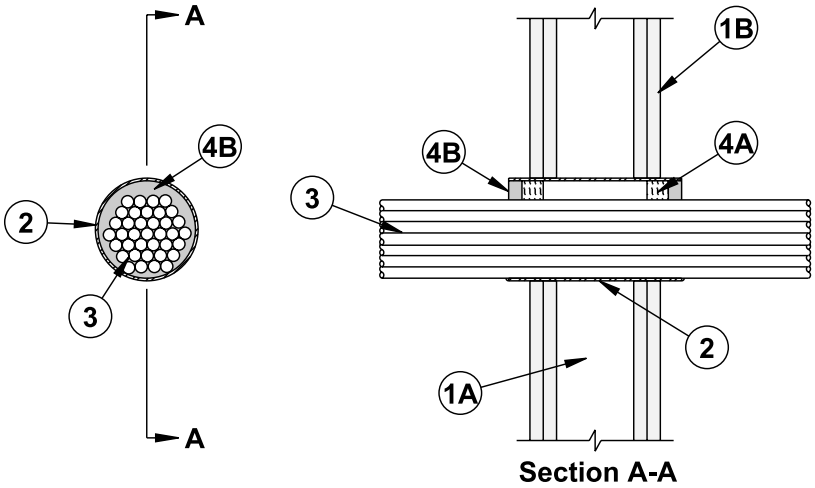

System No. W-L-3170
October 04, 2000
F Ratings — 1 and 2 Hr (See Item 1)
T Ratings — 1/4 and 1 Hr (See Item 3A)

1. **Wall Assembly** — The 1 or 2 hr fire-rated gypsum board/stud wall assembly shall be constructed of the materials and in the manner specified in the individual U300 or U400 Series Wall or Partition Design in the UL Fire Resistance Directory and shall include the following construction features:
   A. **Studs** — Wall framing may consist of either wood studs or steel channel studs. Wood studs to consist of nom 2 by 4 in. lumber spaced 16 in. OC. Steel studs to be min 3-5/8 in. wide and spaced max 24 in. OC.
   B. **Gypsum Board*** — Thickness, type, number of layers and fasteners as specified in the individual Wall and Partition Design. Max diam of opening is 6 in.

   The hourly F Rating of the firestop system is equal to the hourly fire rating of the wall assembly in which it is installed.
2. **Steel Sleeve** — Cylindrical sleeve fabricated from 0.0125 in. thick (30 gauge) galv sheet steel and having a min 2 in. lap along the longitudinal seam. Length of the sleeve to be equal to or max 2 in. greater than the thickness of the wall. Sleeve installed by coiling the sheet steel to a diam smaller than the through opening, inserting the coil through the opening and releasing the coil to let it uncoil against the circular cutouts in the gypsum wallboard layers. The ends of the steel sleeve shall be flush with or extend a max 1 in. beyond each surface of the wall.
   As an alternate, steel sleeve may consist of nom 6 in. diam (or smaller) Schedule 5 (or heavier) steel pipe sleeve friction-fitted into circular cutouts in the gypsum board layers. The ends of the steel sleeve shall be flush with or extend a max 1 in. beyond each surface of the wall.
3. **Cables** — Max 4-1/2 in. diam tight bundle of cables to be installed eccentrically or concentrically within the opening. The annular space between the cables and the periphery of the opening shall be min 0 in. (point contact) to max 1-1/2 in. Cable bundle to be rigidly supported on both sides of the wall assembly. The following types and sizes of cables may be used:
   A. Max 200 pair No. 24 AWG (or smaller) copper conductor with polyvinyl chloride (PVC) insulation and jacketing material.
   B. Max 1/C No. 350 kcmil (or smaller) copper conductor cable with cross-linked polyethylene (XLPE) jacket.
   C. Max 7/C No. 12 AWG (or smaller) copper conductor power and control cables with XLPE or PVC insulation with XLPE or PVC jacket.
   D. Max 3/C No. 2/0 AWG (or smaller) copper or aluminum conductor SER cables with PVC insulation and jacket.
   E. Max 3/C No. 2/0 AWG (or smaller) copper conductor PVC jacketed aluminum clad or steel clad TEK cable.
   F. Max 110/125 fiber optic (F.O.) cable with PVC insulation and jacket.
   G. Max 3/C with ground No. 8 AWG (or smaller) copper conductor NM cable (Romex) with PVC insulation and jacket.
   H. Max RG/U coaxial cable with fluorinated ethylene insulation and jacket.
   I. Max 4 pair No. 24 AWG (or smaller) copper conductor data cable with Hylar jacket and insulation.

3A. **Through Penetrating Product*** — As an alternate to the cables (Item 3), max 4-1/2 in. diam tight bundle of max 4/C No. 2/0 AWG (or smaller) aluminum or steel **Armored Cable+** or **Metal Clad Cable+** installed within the opening. Annular space between through-penetrating products and periphery of opening to be min 0 in. (point contact) to max 1-1/2 in. Through penetrating product rigidly supported on both sides of wall assembly. **When Armored Cable or Metal Clad Cable is used, T Rating is 1/4 hr.**

   AFC CABLE SYSTEMS INC

4. **Firestop System** — The firestop system shall consist of the following:
   A. **Packing Material** — Min 1 in. thickness of 4 pcf mineral wool batt insulation compressed and tightly packed into each end of sleeve. Recess packing material as required to accommodate fill material (Item 4B).
   B. **Fill, Void or Cavity Material*** — **Sealant** — Min 1/2 in. thickness of fill material applied within annulus, flush with each end of steel sleeve. At point contact location, min 1/4 in. diam bead of fill material applied at cable bundle/steel sleeve interface on both sides of wall.

   SPECIFIED TECHNOLOGIES INC — SpecSeal LCI Sealant

*Bearing the UL Classification Marking

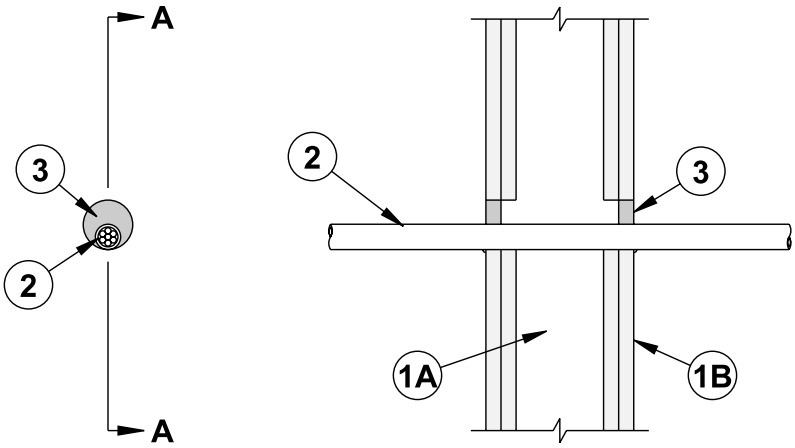

Section A-A

System No. W-L-3171
October 04, 2000
F Ratings — 1 and 2 Hr (See Item 1)
T Ratings — 1/4 and 3/4 Hr (See Item 2A)

1. **Wall Assembly** — The 1 or 2 hr fire-rated gypsum board/stud wall assembly shall be constructed of the materials and in the manner specified in the individual U300 or U400 Series Wall or Partition Design in the UL Fire Resistance Directory and shall include the following construction features:
   A. **Studs** — Wall framing may consist of either wood studs or steel channel studs. Wood studs to consist of nom 2 by 4 in. lumber spaced 16 in. OC. Steel studs to be min 3-5/8 in. wide and spaced max 24 in. OC.
   B. **Gypsum Board*** — Thickness, type, number of layers and fasteners as specified in the individual Wall and Partition Design. Max diam of opening is 1 in. larger than OD of cable (Item 2).

   The hourly F Rating of the firestop system is equal to the hourly fire rating of the wall assembly in which it is installed.
2. **Cable** — One cable to be installed eccentrically or concentrically within the opening. The annular space between the cable and the periphery of the opening shall be min 0 in. (point contact) to max 1 in. Cable to be rigidly supported on both sides of the floor or wall assembly. The following types and sizes of cable may be used:
   A. Max 200 pair No. 24 AWG (or smaller) copper conductor with polyvinyl chloride (PVC) insulation and jacketing material.
   B. Max 1/C No. 350 kcmil (or smaller) copper conductor cable with cross-linked polyethylene (XLPE) jacket.
   C. Max 7/C No. 12 AWG (or smaller) copper conductor power and control cables with XLPE or PVC insulation with XLPE or PVC jacket.
   D. Max 3/C No. 2/0 AWG (or smaller) copper or aluminum conductor SER cables with PVC insulation and jacket.
   E. Max 3/C No. 2/0 AWG (or smaller) copper conductor PVC jacketed aluminum clad or steel clad TEK cable.
   F. Max 110/125 fiber optic (F.O.) cable with PVC insulation and jacket.
   G. Max 3/C with ground No. 8 AWG (or smaller) copper conductor NM cable (Romex) with PVC insulation and jacket.
   H. Max RG/U coaxial cable with fluorinated ethylene insulation and jacket.
   I. Max 4 pair No. 24 AWG (or smaller) copper conductor data cable with Hylar jacket and insulation.

2A. **Through Penetrating Product*** — As an alternate to the cable (Item 2), one max 4/C No. 2/0 AWG (or smaller) aluminum or steel **Armored Cable+** or **Metal Clad Cable+** installed within the opening. Annular space between through-penetrating product and periphery of opening to be min 0 in. (point contact) to max 1 in. Through penetrating product rigidly supported on both sides of wall assembly. **When Armored Cable or Metal Clad Cable is used, T Rating is 1/4 hr.**

   AFC CABLE SYSTEMS INC

3. **Fill, Void or Cavity Material*** — **Sealant** — Min 5/8 in. thickness of fill material applied within annulus, flush with both surfaces of wall assembly. At point contact location, min 1/4 in. diam bead of fill material applied at cable/gypsum board interface on both surfaces of wall.

   SPECIFIED TECHNOLOGIES INC — SpecSeal LCI Sealant

*Bearing the UL Classification Marking

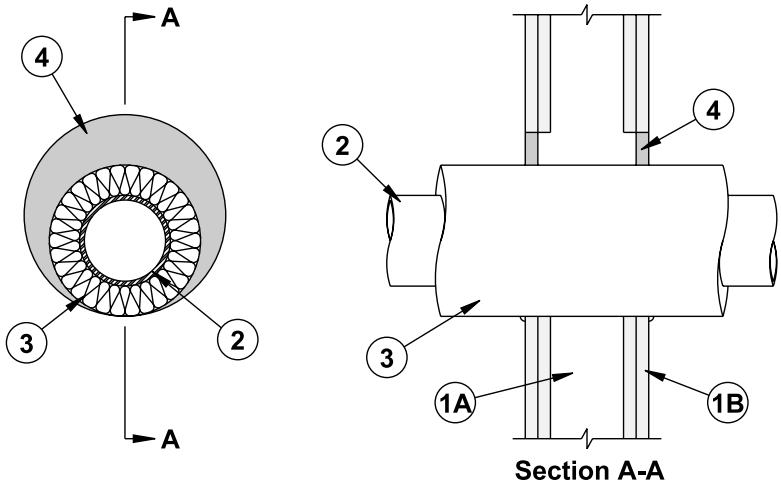

System No. W-L-5121
October 04, 2000
F Ratings — 1 and 2 Hr (See Item 1)
T Rating — 1 Hr

1. **Wall Assembly** — The 1 or 2 hr fire-rated gypsum board/stud wall assembly shall be constructed of the materials and in the manner specified in the individual U300 or U400 Series Wall or Partition Design in the UL Fire Resistance Directory and shall include the following construction features:
   A. **Studs** — Wall framing may consist of either wood studs or steel channel studs. Wood studs to consist of nom 2 by 4 in. lumber spaced 16 in. OC. Steel studs to be min 3-5/8 in. wide and spaced max 24 in. OC.
   B. **Gypsum Board*** — Thickness, type, number of layers and fasteners as specified in the individual Wall and Partition Design. Max diam of opening is 12 in.

   The hourly F Rating of the firestop system is equal to the hourly fire rating of the wall assembly in which it is installed.
2. **Through Penetrant** — One metallic pipe or tube to be installed eccentrically or concentrically within the firestop system. Pipe or tube to be rigidly supported on both sides of the wall assembly. The following types and sizes of metallic pipes and tubes may be used:
   A. **Steel Pipe** — Nom 6 in. diam (or smaller) Schedule 5 (or heavier) steel pipe.
   B. **Iron Pipe** — Nom 6 in. diam (or smaller) cast or ductile iron pipe.
   C. **Copper Pipe** — Nom 4 in. diam (or smaller) Regular (or heavier) copper pipe.
   D. **Copper Tube** — Nom 4 in. diam (or smaller) Type L (or heavier) copper tube.
3. **Pipe Coverings** — One of the following types of pipe coverings shall be used:
   A. **Pipe and Equipment Covering Materials*** — Nom 2 in. thick hollow cylindrical heavy density (min 3.5 pcf) glass fiber units jacketed on the outside with an all service jacket. Longitudinal joints sealed with metal fasteners or factory-applied self-sealing lap tape. Transverse joints secured with metal fasteners or butt tape supplied with the product. Annular space shall be min 0 in. (point contact) to max 1-1/2 in.

      See **Pipe and Equipment Covering Materials** (BRGU) category in the Building Materials Directory for names of manufacturers. Any pipe covering material meeting the above specifications and bearing the UL Classification Marking with a Flame Spread Index of 25 or less and a Smoke Developed Index of 50 or less may be used.
   B. **Pipe Covering Materials*** — Nom 2 in. thick unfaced mineral fiber pipe insulation having a nom density of 3.5 pcf (or heavier) and sized to the outside diam of pipe or tube. Pipe insulation secured with min No. 8 AWG steel wire spaced max 12 in. OC.
   C. **Sheathing Material*** — Used in conjunction with Item 3B. Foil-scrim-kraft or all service jacket material shall be wrapped around the outer circumference of the pipe insulation (Item 3B) with the kraft side exposed. Longitudinal joints and transverse joints sealed with metal fasteners or butt tape. Annular space shall be min 0 in. (point contact) to max 1-1/2 in.

      See **Sheathing Materials** (BVDV) category in the Building Materials Directory for names of manufacturers. Any sheathing material meeting the above specifications and bearing the UL Classification Marking with a Flame Spread Index of 25 or less and a Smoke Developed Index of 50 or less may be used.
4. **Fill, Void or Cavity Material*** — **Sealant** — Min 5/8 in. thickness of fill material applied within annulus, flush with both surfaces of wall assembly. At point contact location, min 1/4 in. diam bead of fill material applied at insulated metallic pipe/gypsum board interface on both surfaces of wall.

   SPECIFIED TECHNOLOGIES INC — SpecSeal LCI Sealant

*Bearing the UL Classification Marking

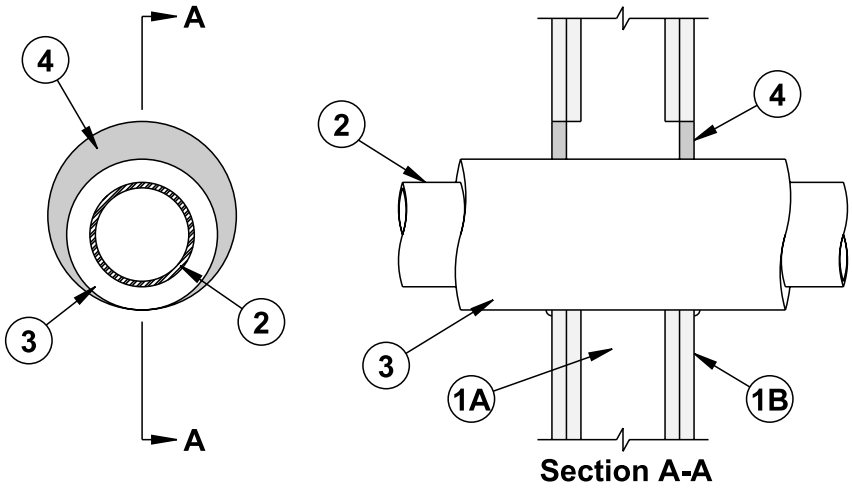

System No. W-L-5122
October 04, 2000
F Ratings — 1 and 2 Hr (See Item 1)
T Rating — 1/4 Hr

1. **Wall Assembly** — The 1 or 2 hr fire-rated gypsum board/stud wall assembly shall be constructed of the materials and in the manner specified in the individual U300 or U400 Series Wall or Partition Design in the UL Fire Resistance Directory and shall include the following construction features:
   A. **Studs** — Wall framing may consist of either wood studs or steel channel studs. Wood studs to consist of nom 2 by 4 in. lumber spaced 16 in. OC. Steel studs to be min 3-5/8 in. wide and spaced max 24 in. OC.
   B. **Gypsum Board*** — Thickness, type, number of layers and fasteners as specified in the individual Wall and Partition Design. Max diam of opening is 7-1/2 in.

   The hourly F Rating of the firestop system is equal to the hourly fire rating of the wall assembly in which it is installed.
2. **Through Penetrant** — One metallic pipe or tube to be installed eccentrically or concentrically within the firestop system. Pipe or tube to be rigidly supported on both sides of the wall assembly. The following types and sizes of metallic pipes and tubes may be used:
   A. **Steel Pipe** — Nom 4 in. diam (or smaller) Schedule 5 (or heavier) steel pipe.
   B. **Iron Pipe** — Nom 4 in. diam (or smaller) cast or ductile iron pipe.
   C. **Copper Pipe** — Nom 2 in. diam (or smaller) Regular (or heavier) copper pipe.
   D. **Copper Tube** — Nom 2 in. diam (or smaller) Type L (or heavier) copper tube.
3. **Tube Insulation** — **Plastics#** — Nom 3/4 in. thick acrylonitrile butadiene/polyvinyl chloride (AB/PVC) flexible foam furnished in the form of tubing. Annular space shall be min 0 in. (point contact) to max 1-1/2 in.

   See **Plastics** (QMFZ2) category in the Plastics Recognized Component Directory for names of manufacturers. Any Recognized Component tube insulation meeting the above specifications and having a UL 94 Flammability Classification of 94-5VA may be used.
4. **Fill, Void or Cavity Material*** — **Sealant** — Min 5/8 in. thickness of fill material applied within annulus, flush with both surfaces of wall assembly. At point contact location, min 1/4 in. diam bead of fill material applied at insulated metallic pipe/gypsum board interface on both surfaces of wall.

   SPECIFIED TECHNOLOGIES INC — SpecSeal LCI Sealant

*Bearing the UL Classification Marking

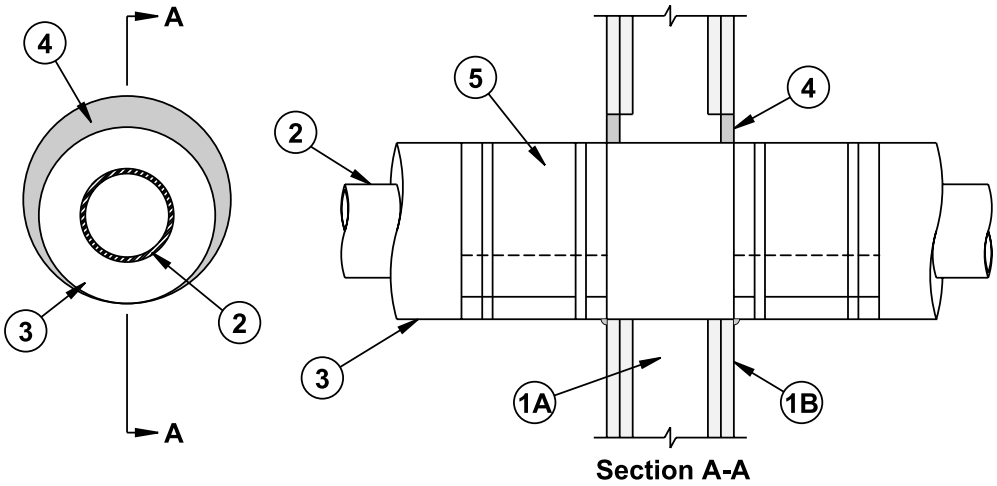

System No. W-L-5123
October 04, 2000
F Ratings — 1 and 2 Hr (See Item 1)
T Ratings — 1 and 2 Hr (See Item 1)

1. **Wall Assembly** — The 1 or 2 hr fire-rated gypsum board/stud wall assembly shall be constructed of the materials and in the manner specified in the individual U300 or U400 Series Wall or Partition Design in the UL Fire Resistance Directory and shall include the following construction features:
   A. **Studs** — Wall framing may consist of either wood studs or steel channel studs. Wood studs to consist of nom 2 by 4 in. lumber spaced 16 in. OC. Steel studs to be min 3-5/8 in. wide and spaced max 24 in. OC.
   B. **Gypsum Board*** — Thickness, type, number of layers and fasteners as specified in the individual Wall and Partition Design. Max diam of opening is 14-1/8 in.

   The hourly F Rating of the firestop system is equal to the hourly fire rating of the wall assembly in which it is installed.
2. **Through Penetrant** — One metallic pipe or tube to be installed eccentrically or concentrically within the firestop system. Pipe or tube to be rigidly supported on both sides of the wall assembly. The following types and sizes of metallic pipes and tubes may be used:
   A. **Steel Pipe** — Nom 6 in. diam (or smaller) Schedule 5 (or heavier) steel pipe.
   B. **Iron Pipe** — Nom 6 in. diam (or smaller) cast or ductile iron pipe.
   C. **Copper Pipe** — Nom 4 in. diam (or smaller) Regular (or heavier) copper pipe.
   D. **Copper Tube** — Nom 4 in. diam (or smaller) Type L (or heavier) copper tube.
3. **Pipe Covering Materials*** — **Cellular Glass Insulation** — Nom 3 in. thick cellular glass units sized to the outside diam of the through-penetrant and supplied in nom 24 in. long half sections or nom 18 in. long segments. Pipe insulation installed on pipe in accordance with the manufacturer's instructions. Annular space shall be min 0 in. (point contact) to max 1-1/2 in.

   PITTSBURGH CORNING CORP — FOAMGLAS
4. **Fill, Void or Cavity Material*** — **Sealant** — Min 5/8 in. thickness of fill material applied within annulus, flush with both surfaces of wall assembly. At point contact location, min 1/4 in. diam bead of fill material applied at insulated metallic pipe/gypsum board interface on both surfaces of wall.

   SPECIFIED TECHNOLOGIES INC — SpecSeal LCI Sealant
5. **Metal Jacket** — Min 12 in. long jacket formed of min 0.010 in. thick aluminum sheet cut to wrap tightly around the pipe insulation with a min 2 in. lap and secured using bands and seals of similar material or No. 18 AWG steel tie wire. Bands or tie wire to be located within 2 in. of each end of the jacket and spaced max 10 in. OC. Jacket to be installed with edge abutting surface of fill material (Item 5B) on both surfaces of wall. Metal jacket to be used in addition to any other jacketing material, which may be required on the pipe covering.

*Bearing the UL Classification Marking

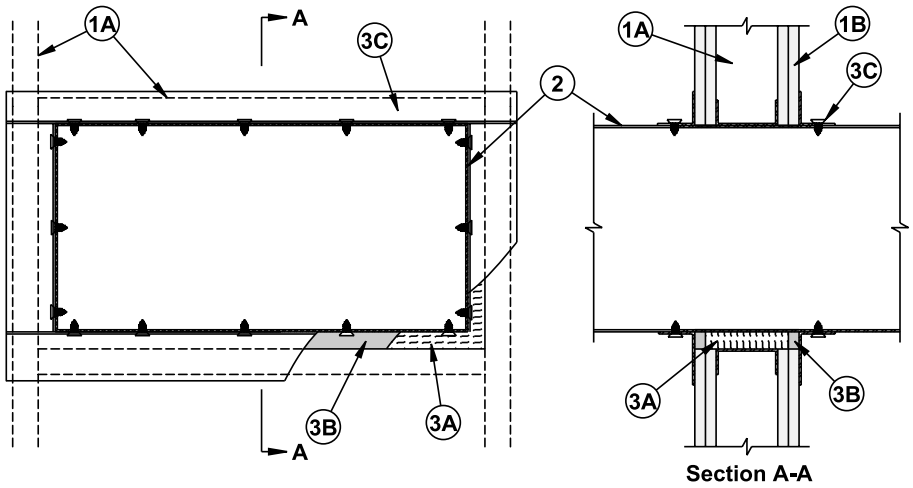

System No. W-L-7060
October 04, 2000
F Ratings — 1 and 2 Hr (See Item 1)
T Rating — 0 Hr

1. **Wall Assembly** — The 1 or 2 hr fire-rated gypsum board/stud wall assembly shall be constructed of the materials and in the manner specified in the individual U300 or U400 Series Wall or Partition Design in the UL Fire Resistance Directory and shall include the following construction features:
   A. **Studs** — Wall framing may consist of either wood studs or steel channel studs. Wood studs to consist of nom 2 by 4 in. lumber spaced 16 in. OC. Steel studs to be min 3-5/8 in. wide and spaced max 24 in. OC. Additional horizontal framing members installed to form a rectangular box around the steel duct (Item 2).
   B. **Gypsum Board*** — Thickness, type, number of layers and fasteners as specified in the individual Wall and Partition Design. When wood studs are used, interior of through opening to be lined with sheets of gypsum board around entire periphery to a total thickness of 5/8 in. or 1-1/4 in. for 1 or 2 hr wall assemblies, respectively. Max area of opening is 364 sq in. with a max dim of 26 in.

   The hourly F Rating of the firestop system is equal to the hourly fire rating of the wall assembly in which it is installed.
2. **Steel Duct** — Nom 12 by 24 in. (or smaller) No. 24 gauge (or heavier) galv steel duct installed eccentrically or concentrically within opening. Annular space between duct and periphery of opening to be min 0 in. (point contact) to max 2 in. Duct to be rigidly supported on both sides of the wall assembly.
3. **Firestop System** — The firestop system shall consist of the following:
   A. **Packing Material** — Min 4 pcf mineral wool batt insulation compressed and tightly packed to min 3-5/8 in. or 4-7/8 in. thickness for 1 or 2 hr fire-rated assemblies, respectively. Packing material recessed from both surfaces of wall as required to accommodate fill material (Item 3B).
   B. **Fill, Void or Cavity Material*** — **Sealant** — Min 5/8 in. thickness of fill material applied within annulus, flush with both surfaces of wall assembly. At point contact location, min 1/4 in. diam bead of fill material applied at steel duct/gypsum board interface on both surfaces of wall.
      SPECIFIED TECHNOLOGIES INC — SpecSeal LCI Sealant
   C. **Retaining Angles** — Min 16 GA galv steel angles sized to lap duct a min of 2 in. and lap periphery of opening a min 1 in. Angles attached to all four sides of steel duct on both surfaces of wall with No. 10 (or larger) steel sheet metal screws spaced 1 in. from each end and max 4 in. OC.

*Bearing the UL Classification Marking

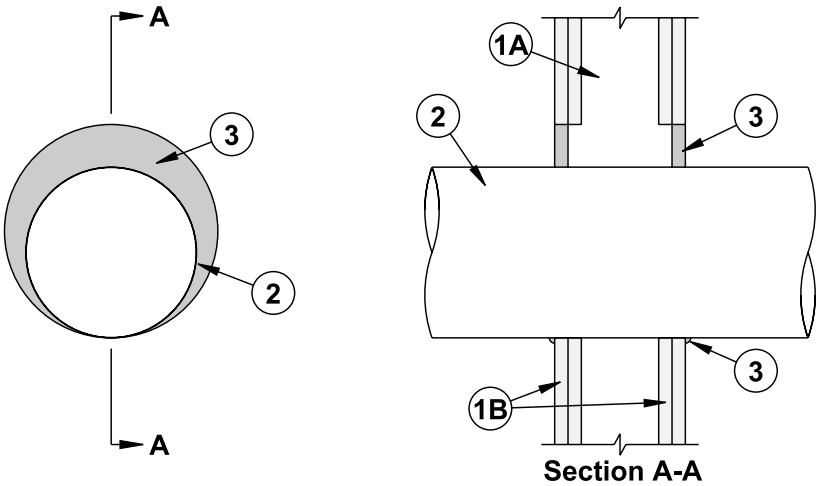

System No. W-L-7061
October 04, 2000
F Ratings — 1 and 2 Hr (See Item 1)
T Rating — 3/4 Hr

1. **Wall Assembly** — The 1 or 2 hr fire-rated gypsum board/stud wall assembly shall be constructed of the materials and in the manner specified in the individual U300 or U400 Series Wall or Partition Design in the UL Fire Resistance Directory and shall include the following construction features:
   A. **Studs** — Wall framing may consist of either wood studs or steel channel studs. Wood studs to consist of nom 2 by 4 in. lumber spaced 16 in. OC. Steel studs to be min 3-5/8 in. wide and spaced max 24 in. OC.
   B. **Gypsum Board*** — Thickness, type, number of layers and fasteners as specified in the individual Wall and Partition Design. Max diam of opening is 2 in. larger than OD of steel duct (Item 2).

   The hourly F Rating of the firestop system is equal to the hourly fire rating of the wall assembly in which it is installed.
2. **Steel Duct** — Nom 8 in. diam (or smaller) No. 28 gauge (or heavier) or nom 4 in. diam (or smaller) No. 30 gauge (or heavier) spiral wound or long seam galv steel duct. Annular space between duct and periphery of opening to be min 0 in. (point contact) to max 2 in. Duct to be rigidly supported on both sides of the wall assembly.
3. **Fill, Void or Cavity Material*** — **Sealant** — Min 5/8 in. thickness of fill material applied within annulus, flush with both surfaces of wall assembly. At point contact location, min 1/4 in. diam bead of fill material applied at steel duct/gypsum board interface on both surfaces of wall.

   SPECIFIED TECHNOLOGIES INC — SpecSeal LCI Sealant

*Bearing the UL Classification Marking

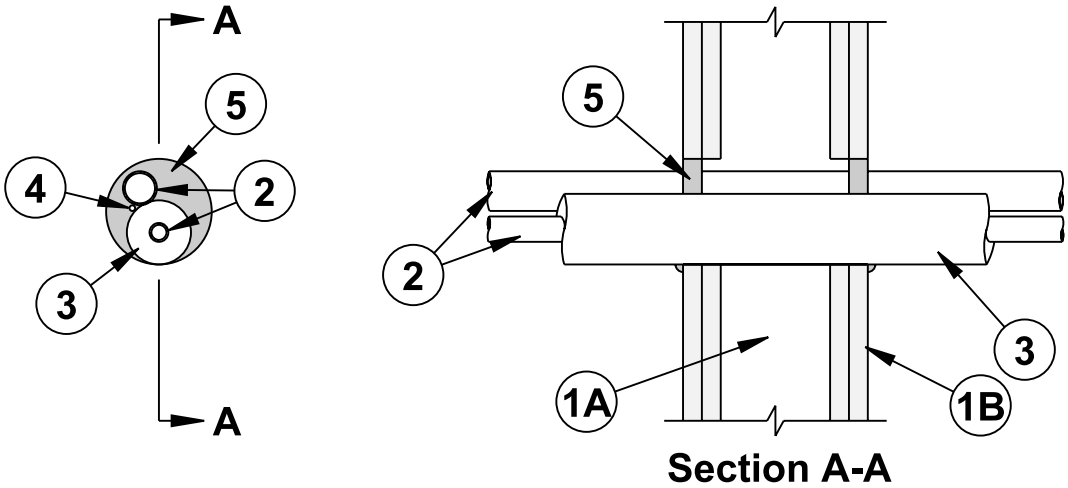

System No. W-L-8025
October 11, 2000
F Ratings — 1 and 2 Hr (See Item 1)
T Rating — 1/4 Hr

1. **Wall Assembly** — The 1 or 2 hr fire-rated gypsum board/stud wall assembly shall be constructed of the materials and in the manner specified in the individual U300 or U400 Series Wall or Partition Design in the UL Fire Resistance Directory and shall include the following construction features.
   A. **Studs** — Wall framing may consist of either wood studs or steel channel studs. Wood studs to consist of nom 2 by 4 in. lumber spaced 16 in. OC. Steel studs to be min 3-5/8 in. wide and spaced max 24 in. OC.
   B. **Gypsum Board*** — Thickness, type, number of layers and fasteners as specified in the individual Wall and Partition Design. Max diam of opening is 3-1/2 in.

   The hourly F Rating of the firestop system is equal to the hourly fire rating of the wall assembly in which it is installed.
2. **Through Penetrant** — A max of two pipes or tubes to be installed within the opening. Of the two pipes or tubes, only one may have a nom diam greater than 1/2 in. Annular space between pipes or tubing and periphery of opening shall be min 0 in. (point contact) to max 1-1/2 in. Separation between uninsulated pipes or tubes shall be min 0 in. (point contact) to max 1-1/2 in. Pipes or tubing to be rigidly supported on both sides of the wall assembly. The following types and sizes of through penetrants may be used:
   A. **Steel Pipe** — Nom 1 in. diam (or smaller) Schedule 5 (or heavier) steel pipe.
   B. **Iron Pipe** — Nom 1 in. diam (or smaller) cast or ductile iron pipe.
   C. **Copper Pipe** — Nom 1 in. diam (or smaller) Regular (or heavier) copper pipe.
   D. **Copper Tube** — Nom 1 in diam (or smaller) Type L (or heavier) copper tube.
3 **Tube Insulation** — **Plastics#** — Nom 3/4 in. thick acrylonitrile butadiene/polyvinyl chloride (AB/PVC) flexible foam furnished in the form of tubing. The tube insulation may be installed on a max of one pipe or tube. The annular space between the insulated penetrating item and the periphery of the opening shall be min 0 in. (point contact) to max 1/2 in. The space between insulated and uninsulated pipes or tubing shall be 0 in. (point contact).

   See **Plastics** (QMFZ2) category in the Plastics Recognized Component Directory for names of manufacturers. Any Recognized Component tube insulation meeting the above specifications and having a UL 94 Flammability Classification of 94-5VA may be used.
4. **Cable** — One 4 pair No. 18 AWG (or smaller) thermostat cable with polyvinyl chloride (PVC) insulation and jacket materials. Cable to be spaced min 0 in. (point contact) to max 1/2 in. from the other penetrants. The space between the cable and the periphery of the opening shall be min 0 in. (point contact) to max 1/2 in. Cable to be rigidly supported on both sides of wall assembly.
5. **Fill, Void or Cavity Material*** — **Sealant** — Min 5/8 in thickness of fill material applied within annulus, flush with both surfaces of wall assembly. At point contact location, min 1/4 in. diam bead of fill material applied at through penetrant/gypsum board interface on both surfaces of wall. Additional fill material forced into grouped penetrant interstices to max extent possible.

   SPECIFIED TECHNOLOGIES INC — SpecSeal LCI Sealant.

*Bearing the UL Classification Marking
#Bearing the UL Recognized Component Marking

Specified
Technologies
Inc.

200 Evans Way, Suite 2
Somerville, N .J. 08876
Phone: (908) 526-8000
Fax: (908) 526-9623
Toll Free: (800) 992-1180

GENERAL CERTIFICATE of CONFORMANCE

Description: SpecSeal® Firestop Products

Included Products:

Series SSS Intumescent Sealant
Series LCI Intumescent Sealant
Series LC Latex Endothermic Sealant
Series SSP Intumescent Putty
Series EP Power Shield™ Box Insert
Series SSWRED Intumescent Wrap Strips
Series SSWBLU Intumescent Wrap Strips
Series SSC Intumescent Firestop Collars
Series LCC Intumescent Firestop Collars
Series SSB Intumescent Firestop Pillows
Series AS100 Elastomeric Spray
Series AS200 Elastomeric Spray
Series ES100 Elastomeric Sealant
Series SSM Firestop Mortar
Pensil Series PEN200 Silicone Foam
Pensil Series PEN300 Silicone Sealant
Pensil Series PEN300SL Silicone Sealant

These products are tested to the following standards where applicable:

ASTM STANDARD:

E 814	Fire Tests of Through-Penetration Fire Stops
E 119	Fire Tests of Building Construction and Materials
E 1966	Fire-Resistive Joint Systems
E 84	Surface Burning Characteristics of Building Materials
E 1399	Cyclic Movement and Measuring the Minimum and Maximum Joint Widths of Architectural Joint Systems

UL STANDARD

1479	Fire Tests of Through-Penetration Firestops
263	Fire Tests of Building Construction and Materials
2079	Tests for Fire-Resistance of Building Joint Systems
723	Tests for Surface Burning Characteristics of Building Materials

Chemical Content Statements:

No asbestos, PCB's or water-soluble intumescent ingredients are used or contained in these products.

February 1, 2002

James P. Stahl, Jr.
Technical Manager

Date

Material Safety Data Sheet

01-JAN-2003

SpecSeal® LCC FIRESTOP COLLAR

CHEMICAL PRODUCT/COMPANY IDENTIFICATION

Material Identification

PRODUCT NAME.....SpecSeal® LCC Firestop Collar
CHEMICAL FAMILY.....Does not apply

Company Identification

MANUFACTURER/DISTRIBUTOR

Specified Technologies, Inc.
200 Evans Way
Somerville, NJ 08876

PHONE NUMBERS

Product Information : 1-908-526-8000
Emergency : 1-800-255-3924

COMPOSITION/INFORMATION ON INGREDIENTS

Metal collar with contained rubber strip.

HAZARDS IDENTIFICATION

**********EMERGENCY OVERVIEW**********
* Non-hazardous metal collar with contained rubber strip. *
****

Potential Health Effects:

EYE: Contact may cause physical irritation.
SKIN: None anticipated.
INGESTION: Not likely.
INHALATION: None anticipated.
CHRONIC (CANCER) INFORMATION: None known.
LONG TERM TOXIC EFFECTS: None known.

FIRST AID MEASURES

First Aid

INHALATION: None applicable.
SKIN CONTACT: None applicable.
EYE CONTACT: Irrigate eyes with running water for at least 15 minutes. Get medical attention if irritation develops.
INGESTION: None applicable.

FIRE FIGHTING MEASURES

Flash point: Not established.

EXTINGUISHING MEDIA.....Dry Chemical; Carbon Dioxide; Foam; Water spray for large fires.

SPECIAL FIRE FIGHTING PROCEDURES: .....As for surrounding fire.

ACCIDENTAL RELEASE MEASURES

Safeguards (Personnel)
NOTE: Review FIRE FIGHTING MEASURES and HANDLING (PERSONNEL) sections before proceeding with clean-up. Use appropriate PERSONAL PROTECTIVE EQUIPMENT during clean-up.

HANDLING AND STORAGE

Store under ambient conditions. No special handling required.

EXPOSURE CONTROLS/PERSONAL PROTECTION

EYE PROTECTION REQUIREMENTS:.....Safety glasses/goggles.
SKIN PROTECTION REQUIREMENTS: .....None.
RESPIRATOR REQUIREMENTS: .....None.
VENTILATION REQUIREMENTS:.....If needed, use local exhaust ventilation to keep airborne concentrations below the TLV.

Exposure Guidelines
Exposure Limits
None.

PHYSICAL AND CHEMICAL PROPERTIES

PHYSICAL FORM ..... Solid
SPECIFIC GRAVITY..... NA
PERCENT VOLATILES..... 0
SOLUBILITY IN WATER..... Insoluble

STABILITY AND REACTIVITY

STABILITY: ..... This is a stable material.
CONDITIONS TO AVOID:..... None.
HAZARDOUS POLYMERIZATION:..... Will not occur.
INCOMPATIBILITIES:…….....…….None special.

TOXICOLOGICAL INFORMATION

Mixture not tested but based on components:

Should only cause physical irritation only.

Components not designated as carcinogens by IARC, ACGIH, OSHA and NTP.

ECOLOGICAL INFORMATION

No data but not anticipated to be an environmental hazard.

DISPOSAL CONSIDERATIONS

Waste Disposal:
Treatment, storage, transportation, and disposal must be in accordance with applicable Federal, State/Provincial, and Local regulations.

TRANSPORTATION INFORMATION

DOT – not regulated.

REGULATORY INFORMATION

U.S. Federal Regulations

TSCA Inventory Status: Article.

Section 313 Supplier Notifications.
This product contains no toxic chemicals subject to the reporting requirements of Section 313 of the Emergency Planning and Community Right-To-Know Act of 1986 and of 40 CFR 372:

OTHER INFORMATION

NPCA-HMIS Rating
Health : 0
Flammability : 1
Reactivity : 0
Personal Protection rating to be supplied by user depending on use conditions.

STATE RIGHT-TO-KNOW LAWS

No substances on the state hazardous substances list, for the states indicated below, are used in the manufacture of products on this Material Safety Data Sheet, with the exceptions indicated. While we do not specifically analyze these products, or the raw materials used in their manufacture, for substances on various state hazardous substances lists, to the best of our knowledge the products on this Material Safety Data Sheet contain no such substances except for those specifically listed below:

SUBSTANCES ON THE NEW JERSEY WORKPLACE HAZARDOUS SUBSTANCE LIST PRESENT AT A CONCENTRATION OF 1% OR MORE (0.1% FOR SUBSTANCES IDENTIFIED AS CARCINOGENS, MUTAGENS OR TERATOGENS): NJTSRN-LCC.

WARNING: SUBSTANCES KNOWN TO THE STATE OF CALIFORNIA TO CAUSE CANCER: May contain traces of substances known to the State of California to cause cancer.

WARNING: SUBSTANCES KNOWN TO THE STATE OF CALIFORNIA TO CAUSE BIRTH DEFECTS OR OTHER REPRODUCTIVE HARM: None known.

This information relates to the specific material designated and may not be valid for such material used in combination with any other materials or in any process. Such information is to the best of our knowledge and belief accurate and reliable as of the data compiled. However, no representation, warranty, or guarantee is made as to its accuracy, reliability or completeness. It is the user's responsibility to satisfy himself as to the suitability and completeness of such information for his own particular use. We do not accept liability for any loss or damage that may occur form the use of this information.

Responsibility for MSDS :

Specified Technologies, Inc.
200 Evans Way
Somerville, NJ 08876

Material Safety Data Sheet

01-JAN-2003

SpecSeal® TYPE LCI SEALANT

CHEMICAL PRODUCT/COMPANY IDENTIFICATION

Material Identification

PRODUCT NAME.....SpecSeal® LCI Sealant

CHEMICAL FAMILY.....Mixture

Company Identification

MANUFACTURER/DISTRIBUTOR

Specified Technologies, Inc.
200 Evans Way
Somerville, NJ 08876

PHONE NUMBERS

Product Information : 1-908-526-8000
Emergency : 1-800-255-3924

COMPOSITION/INFORMATION ON INGREDIENTS

INGREDIENT NAME	CAS NUMBER
Proprietary mixture	----------

HAZARDS IDENTIFICATION

**********EMERGENCY OVERVIEW**********
* Possible skin and eye irritant. Pale, red paste. *
****

Potential Health Effects:

EYE: Contact may cause irritation.

SKIN: Contact may cause irritation.

INGESTION: Relatively non-toxic.

INHALATION: Irritation of the nose, throat, and lungs may result from over-exposure to vapors or mist.

CHRONIC (CANCER) INFORMATION: Not classified as carcinogenic.

LONG TERM TOXIC EFFECTS: None known.

FIRST AID MEASURES

First Aid

INHALATION: Remove to fresh air.
SKIN CONTACT: Wash thoroughly.
EYE CONTACT: Irrigate eyes with running water for at least 15 minutes. Get medical attention if irritation develops.
INGESTION: None applicable.

FIRE FIGHTING MEASURES

Not a fire hazard.

EXTINGUISHING MEDIA.....Dry Chemical; Carbon Dioxide; Foam; Water spray for large fires.

SPECIAL FIRE FIGHTING PROCEDURES: .....As for surrounding fire.

ACCIDENTAL RELEASE MEASURES

Safeguards (Personnel)
NOTE: Review FIRE FIGHTING MEASURES and HANDLING (PERSONNEL) sections before proceeding with clean-up. Use appropriate PERSONAL PROTECTIVE EQUIPMENT during clean-up.

HANDLING AND STORAGE

Store under ambient conditions. No special handling required.

EXPOSURE CONTROLS/PERSONAL PROTECTION

EYE PROTECTION REQUIREMENTS:.....Safety glasses/goggles.
SKIN PROTECTION REQUIREMENTS: .....Gloves.
RESPIRATOR REQUIREMENTS: .....None.
VENTILATION REQUIREMENTS:.....If needed, use local exhaust ventilation to keep airborne concentrations below the TLV.

Exposure Guidelines
Exposure Limits
PEL(OSHA) : Particulates (Not Otherwise Classified) 15 mg/m3, 8 Hr. TWA, total dust 5 mg/m3, 8 Hr. TWA, respirable dust
TLV(ACGIH): None Established

PHYSICAL AND CHEMICAL PROPERTIES

PHYSICAL FORM ..... Pale, red paste with minimal odor
SPECIFIC GRAVITY..... 1.10
PERCENT VOLATILES..... 22
EVAPORATION RATE..... >1
BOILING POINT ..... 100 deg. C
SOLUBILITY IN WATER..... Infinitely dilutable

STABILITY AND REACTIVITY

STABILITY: ..... This is a stable material.
CONDITIONS TO AVOID..... Storage >55 deg. C
HAZARDOUS POLYMERIZATION:..... Will not occur.
INCOMPATIBILITIES:…….....None special.

TOXICOLOGICAL INFORMATION

Mixture not tested but based on components:
May be irritating to skin and eyes and may aggravate existing skin and eye conditions.
None of the components are listed as carcinogens.

ECOLOGICAL INFORMATION

No data.

DISPOSAL CONSIDERATIONS

Waste Disposal:
Treatment, storage, transportation, and disposal must be in accordance with applicable Federal, State/Provincial, and Local regulations.

TRANSPORTATION INFORMATION

DOT – not regulated.

REGULATORY INFORMATION

U.S. Federal Regulations

TSCA Inventory Status: Reported/Included.

Section 313 Supplier Notifications.
This product contains no toxic chemicals subject to the reporting requirements of Section 313 of the Emergency Planning and Community Right-To-Know Act of 1986 and of 40 CFR 372:

OTHER INFORMATION

NPCA-HMIS Rating
Health : 1
Flammability : 0
Reactivity : 0
Personal Protection rating to be supplied by user depending on use conditions.

STATE RIGHT-TO-KNOW LAWS

No substances on the state hazardous substances list, for the states indicated below, are used in the manufacture of products on this Material Safety Data Sheet, with the exceptions indicated. While we do not specifically analyze these products, or the raw materials used in their manufacture, for substances on various state hazardous substances lists, to the best of our knowledge the products on this Material Safety Data Sheet contain no such substances except for those specifically listed below:

SUBSTANCES ON THE NEW JERSEY WORKPLACE HAZARDOUS SUBSTANCE LIST PRESENT AT A CONCENTRATION OF 1% OR MORE (0.1% FOR SUBSTANCES IDENTIFIED AS CARCINOGENS, MUTAGENS OR TERATOGENS): NJTSRN-LCI300

WARNING: SUBSTANCES KNOWN TO THE STATE OF CALIFORNIA TO CAUSE CANCER: Possible traces of formaldehyde, ethyl acrylate, acetaldehyde, acrylamide and acrylonitrile.

WARNING: SUBSTANCES KNOWN TO THE STATE OF CALIFORNIA TO CAUSE BIRTH DEFECTS OR OTHER REPRODUCTIVE HARM: None known.

This information relates to the specific material designated and may not be valid for such material used in combination with any other materials or in any process. Such information is to the best of our knowledge and belief accurate and reliable as of the data compiled. However, no representation, warranty, or guarantee is made as to its accuracy, reliability or completeness. It is the user's responsibility to satisfy himself as to the suitability and completeness of such information for his own particular use. We do not accept liability for any loss or damage that may occur form the use of this information.

Responsibility for MSDS :

Specified Technologies, Inc.
200 Evans Way
Somerville, NJ 08876

Material Safety Data Sheet

01-JAN-2003

SpecSeal® Firestop Putty

CHEMICAL PRODUCT/COMPANY IDENTIFICATION

Material Identification

PRODUCT NAME.....SpecSeal® Firestop Putty
CHEMICAL FAMILY.....Mixture

Company Identification

MANUFACTURER/DISTRIBUTOR

Specified Technologies, Inc.
200 Evans Way
Somerville, NJ 08876

PHONE NUMBERS

Product Information : 1-908-526-8000
Emergency : 1-800-255-3924

COMPOSITION/INFORMATION ON INGREDIENTS

INGREDIENT NAME	CAS NUMBER
Proprietary mixture	----------

HAZARDS IDENTIFICATION

**********EMERGENCY OVERVIEW**********
* Possible skin and eye irritant. Red solid. *
****

Potential Health Effects:

EYE: Contact may cause irritation and redness.

SKIN: Contact may cause irritation and redness.

INGESTION: Relatively non-toxic.

INHALATION: Irritation of the nose, throat, and lungs may result from over-exposure to vapors or mist from heated material.

CHRONIC (CANCER) INFORMATION: Not classified as carcinogenic.

LONG TERM TOXIC EFFECTS: None known.

FIRST AID MEASURES

First Aid

INHALATION: Remove to fresh air.
SKIN CONTACT: Wash thoroughly.
EYE CONTACT: Irrigate eyes with running water for at least 15 minutes. Get medical attention if irritation develops.
INGESTION: None applicable.

FIRE FIGHTING MEASURES

FLASH POINT >163 deg. C based on most volatile component.

EXTINGUISHING MEDIA.....Dry Chemical; Carbon Dioxide; Foam; Water spray for large fires.

SPECIAL FIRE FIGHTING PROCEDURES: .....As for surrounding fire.

ACCIDENTAL RELEASE MEASURES

Safeguards (Personnel)
NOTE: Review FIRE FIGHTING MEASURES and HANDLING (PERSONNEL) sections before proceeding with clean-up. Use appropriate PERSONAL PROTECTIVE EQUIPMENT during clean-up.

HANDLING AND STORAGE

Store under ambient conditions. No special handling required.

EXPOSURE CONTROLS/PERSONAL PROTECTION

EYE PROTECTION REQUIREMENTS:.....Safety glasses/goggles.
SKIN PROTECTION REQUIREMENTS: .....Gloves.
RESPIRATOR REQUIREMENTS: .....None.
VENTILATION REQUIREMENTS:.....None.

Exposure Guidelines
None.

PHYSICAL AND CHEMICAL PROPERTIES

PHYSICAL FORM ..... Red solid with minimal odor
SPECIFIC GRAVITY..... 1.49
PERCENT VOLATILES..... none
SOLUBILITY IN WATER..... Very slight

STABILITY AND REACTIVITY

STABILITY: ..... This is a stable material.
CONDITIONS TO AVOID..... Storage >55 deg. C
HAZARDOUS POLYMERIZATION:..... Will not occur.
INCOMPATIBILITIES:…….....None special.

TOXICOLOGICAL INFORMATION

Mixture not tested but based on components:

May be irritating to skin and eyes and may aggravate existing skin and eye conditions.
Irritation of the nose, throat, and lungs may result from over-exposure to vapors or mist from heated material.

None of the components are listed as carcinogens.

ECOLOGICAL INFORMATION

No data. Not anticipated to be environmental hazard.

DISPOSAL CONSIDERATIONS

Waste Disposal:
Treatment, storage, transportation, and disposal must be in accordance with applicable Federal, State/Provincial, and Local regulations.

TRANSPORTATION INFORMATION

DOT – not regulated.

REGULATORY INFORMATION

U.S. Federal Regulations

TSCA Inventory Status: Article.

Section 313 Supplier Notifications.
This product contains no toxic chemicals subject to the reporting requirements of Section 313 of the Emergency Planning and Community Right-To-Know Act of 1986 and of 40 CFR 372:

OTHER INFORMATION

NPCA-HMIS Rating
Health : 1
Flammability : 0
Reactivity : 0
Personal Protection rating to be supplied by user depending on use conditions.

STATE RIGHT-TO-KNOW LAWS

No substances on the state hazardous substances list, for the states indicated below, are used in the manufacture of products on this Material Safety Data Sheet, with the exceptions indicated. While we do not specifically analyze these products, or the raw materials used in their manufacture, for substances on various state hazardous substances lists, to the best of our knowledge the products on this Material Safety Data Sheet contain no such substances except for those specifically listed below:

SUBSTANCES ON THE NEW JERSEY WORKPLACE HAZARDOUS SUBSTANCE LIST PRESENT AT A CONCENTRATION OF 1% OR MORE (0.1% FOR SUBSTANCES IDENTIFIED AS CARCINOGENS, MUTAGENS OR TERATOGENS): NJTSRN-SSP

WARNING: SUBSTANCES KNOWN TO THE STATE OF CALIFORNIA TO CAUSE CANCER: Possible traces of formaldehyde and acrylonitrile.

WARNING: SUBSTANCES KNOWN TO THE STATE OF CALIFORNIA TO CAUSE BIRTH DEFECTS OR OTHER REPRODUCTIVE HARM: None known.

This information relates to the specific material designated and may not be valid for such material used in combination with any other materials or in any process. Such information is to the best of our knowledge and belief accurate and reliable as of the data compiled. However, no representation, warranty, or guarantee is made as to its accuracy, reliability or completeness. It is the user's responsibility to satisfy himself as to the suitability and completeness of such information for his own particular use. We do not accept liability for any loss or damage that may occur form the use of this information.

Responsibility for MSDS :

Specified Technologies, Inc.
200 Evans Way
Somerville, NJ 08876

SpecSeal FIRESTOP PRODUCTS

SERIES LCC FIRESTOP COLLARS

Product Data Sheet

STI

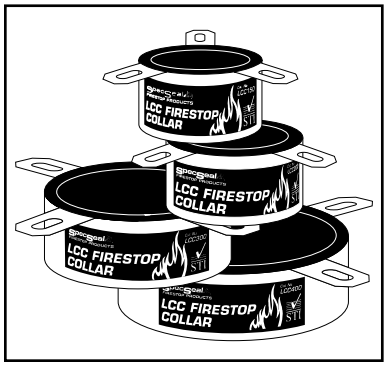

FEATURES

- **Rapid Expansion:** Closes off burning pipes quickly.
- **Small Profile:** Use it in all the tight spots!
- **Flexible & Durable:** No loose flakes (eye hazards).
- **Water Resistant:** No water soluble or hygroscopic ingredients.
- **Economical:** Lower installed cost.
- **High Volume Char:** Expands up to 60 times!

CLASSIFIED UL 8L98

FIRESTOP DEVICE CLASSIFIED BY UNDERWRITERS LABORATORIES INC. ® FOR USE IN THROUGH-PENETRATION FIRESTOP SYSTEMS. SEE UL FIRE RESISTANCE DIRECTORY

Table A: PHYSICAL PROPERTIES

Available Sizes
1.5″, 2″, 3″, and 4″

Shell Construction
Galvanized Steel

Expansion Begins
320°F (160°C)

Volume Expansion
32 to 64X (free expansion)

In Service Temp
≤120°F (49°C)

1. PRODUCT DESCRIPTION

The SpecSeal® Series LCC Firestop Collar is a factory-manufactured device designed to protect plastic pipes penetrating fire-rated walls and floors. Utilizing a heavy gauge galvanized metal collar to house a molded intumescent insert, the SpecSeal® LC Collar is specifically sized to fit 1-1/2″, 2″, 3″, and 4″ trade sized pipes. When exposed to temperatures in excess of 320°F (160°C), the SpecSeal® LC Collar's molded insert begins to expand (intumesce) rapidly to form a dense, highly insulative char. Its free expansion ranges from 32-64 times original (pre-expanded) volume. Expansion continues up to 1,000°F.

2. APPLICATIONS

SpecSeal® LC Collars are used to protect a variety of plastic pipes including PVC, PVC Foam Core (ccPVC), CPVC, ABS, and ABS Foam Core (ccABS) in both vented (DWV) and closed (electrical conduit and water supply) installations.

SpecSeal® LC Collars are suitable for use in all common constructions including concrete floors, concrete over steel deck, concrete walls, concrete block walls, gypsum board walls, as well as wood floor assemblies.

3. PHYSICAL PROPERTIES

See Table A. This material is extremely stable. Long term aging studies indicate no significant loss of physical properties nor significant change in expansion properties after elevated temperature and/or humidity testing. Consult factory for additional information.

4. PERFORMANCE

SpecSeal® LC Collars are the basis for systems that meet the exacting criteria of ASTM E814 (UL1479). Systems have been tested for all common forms of masonry construction and the most common plastic pipes with ratings up to two hours. Consult factory for information not available in UL Fire Resistance Directory as of this printing.

5. SPECIFICATIONS

The firestop system shall be a factory assembled firestop collar utilizing a molded, flexible intumescent insert. The intumescent insert shall provide a minimum of 30X free expansion and shall contain no water soluble expansion ingredients. The specified material shall be approved for a wide range of applications including PVC, PVC Foam Core, CPVC, ABS, and ABS Foam Core pipes when used by itself or in combination with other products from the same manufacturer. The collar shall be UL Classified and tested to the requirements of ASTM E814 (UL1479).

SPECIFIED DIVISIONS

DIV.	7	07840	Thermal & Moisture Protection – Firestopping
DIV.	13	13900	Special Construction Fire Suppression & Supervisory Systems
DIV.	15	15250	Mechanical Insulation – Fire Protection
DIV.	16	16050	Basic Electrical Materials & Methods

6. INSTALLATION

GENERAL: The installation of this product may require the application of a smoke seal utilizing SpecSeal® Series LCI Sealant as well as suitable mechanical fasteners for attachment to the floor or wall surface. Sealant and floor or wall attachment hardware must be purchased separately. SpecSeal® LC Collars are very compact in design and therefore require relatively small cored openings. See Table C for collar dimensions and recommended opening sizes.

SYSTEM SELECTION: Proper methods and materials are critical to firestopping. A number of methods have been developed to suit a wide variety of firestopping applications. Consult the UL Fire Resistance Directory, STI's LC Intumescent Product & Application Guide, or the Technical Library at www.stifirestop.com for the latest in tested application designs. Additional product literature or information may also be obtained by calling your local distributor, sales rep. or STI toll free at (800) 992-1180.

SMOKE SEALING: Some applications may require the application of sealant into the annulus around the pipe as a smoke seal. Consult the UL Classified design for installation requirements including depth and location of caulking. Where required, apply sealant to a clean surface, free of dirt, oil, rust, or scale. Caulk annulus completely shut. Sealant may be smoothed out or the collar may be set directly into the wet sealant.

For the latest Product and System Information, Call STI'S FACTS-ON-DEMAND automated information attendant system by dialing toll-free (888)526-6800!

PACKING MATERIALS: In some applications where the collar diameter is insufficient to completely cover the opening around the pipe, some tested designs may require mineral wool packing material to be installed into the annulus prior to the installation of the collar.

FASTENERS: Always use the correct type of fasteners shown in the appropriate UL Classified design. All fasteners should be steel (lead or plastic fasteners are unsuitable and should not be used). 1 1/4″ or 1 1/2″ fender washers are used in conjunction with all wall or floor fasteners. All fasteners should be installed as per the recommendations of the manufacturer.

CONCRETE: Expanding wedge type anchors (1/4″ x 1 3/4″) are recommended. Self-tapping steel concrete fasteners are also approved for some installations. Powder activated fasteners may be used at the discretion of the installer and subject to the recommendations of the fastener manufacturer.

GYPSUM WALLBOARD: Toggle bolts or molly-type expanding anchors are suitable for collar attachment.

GYPSUM BOARD-WOOD FLOOR FLOOR/CEILING ASSEMBLIES: Toggle bolts are suggested for gypsum wallboard ceiling attachment. Collars mounted internally and fastened to wood may use standard #8 x 1/2″ round head wood screws for attachment.

INSTALLATION FOR SURFACE MOUNTING:

1. Install SpecSeal® Firestop Sealant (if required).
2. With anchor tabs facing the mounting surface, flex collar open and wrap around pipe (See Fig. 1)
3. Collar uses a double hook tab and slot closure. Overlap collar so that the slots align over hook tabs (See Fig. 2)
4. Press slots down and back (towards mounting surface) over hooks and lock into the closed position (See Fig. 3)
5. Slide collar to mounting surface and mark fastener locations. Rotate collar or slide away from mounting surface to allow holes to be drilled. Reposition collar and install fasteners and fender washers. Tighten fasteners completely to finish collar installation.

7. MAINTENANCE

INSPECTION: Installations should be inspected periodically for subsequent damage. Any damage should be repaired using SpecSeal® products per the original approved design.

8. TECHNICAL SERVICE

Specified Technologies Inc. provides toll free technical support to assist in product selection and appropriate installation design. UL System designs suitable for submittal or specification purposes are available on request. A complete library of technical information is provided at the company's website www.stifirestop.com.

9. PRECAUTIONARY INFORMATION

No unusual hazards are known or expected. Observe normal safety procedures during installation.

10. AVAILABILITY

SpecSeal® Firestop Collars are available from authorized STI distributors nationwide. Consult factory for the names and locations of the nearest sales representatives or distributors.

FIG. 1

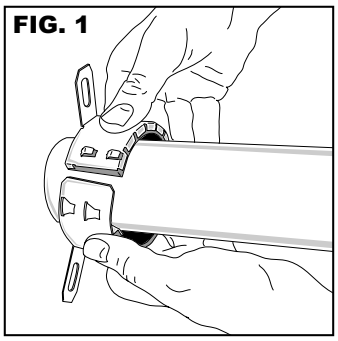

FIG. 2

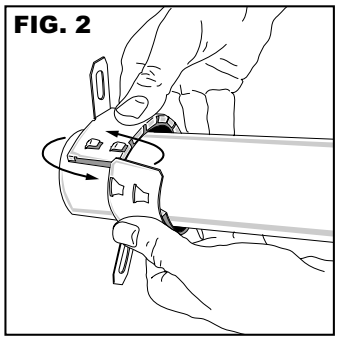

FIG. 3

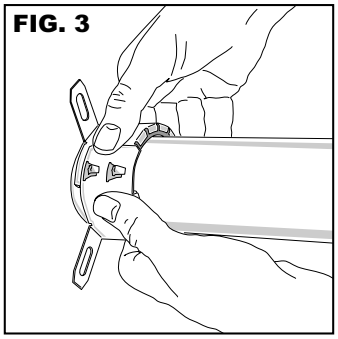

FIG. 4

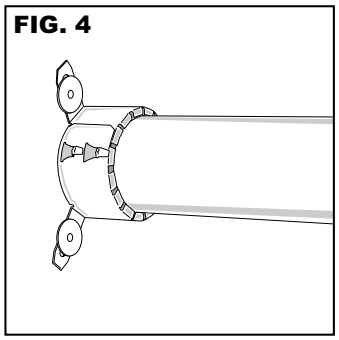

Table B: COLLAR DIMENSIONS & RECOMMENDED CORE SIZES

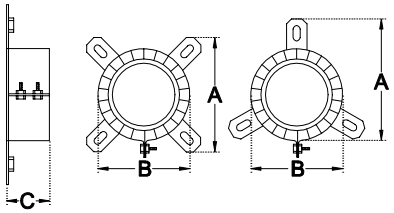

The following dimensions are provided for installation purposes only. All dimensions have been rounded up to the next 1/10th in.

Cat No. LCC	150	200	300	400
Trade Size	1.5″	2″	3″	4″
Opening Size	2″	2.5″	4″	5″
A	4″	4.4″	5.4″	6.2″
B	2.3″	2.8″	4.3″	5.5″
C	1.5″	1.5″	1.5″	1.5″

Table D: ORDERING INFORMATION

Cat. No.	Description
LCC150	For 1.5″ Trade Size Plastic Pipe
LCC200	For 2.0″ Trade Size Plastic Pipe
LCC300	For 3.0″ Trade Size Plastic Pipe
LCC400	For 4.0″ Trade Size Plastic Pipe

Additional SpecSeal Products...

Series LCI Sealant: A versatile and economical intumescent product for firestopping a wide array of applications in small commercial or grouped residential construction.

STI® Specified Technologies Inc.

200 Evans Way • Somerville, NJ 08876
Phone: (800) 992-1180 • Fax: (908) 526-9623
Facts-On-Demand: (888) 526-6800
STI on the WEB: www.stifirestop.com

Specified Technologies, Inc.

PRODUCT DATA SHEET

SpecSeal® Series LCI Intumescent Sealant

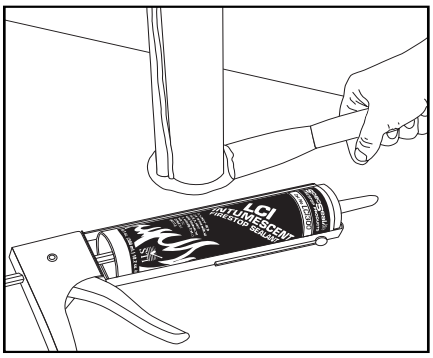

CLASSIFIED UL 3L73 — FILL, VOID OR CAVITY MATERIALS CLASSIFIED BY UNDERWRITERS LABORATORIES INC. ® FOR USE IN THROUGH-PENETRATION FIRESTOP SYSTEMS.

SEE UL FIRE RESISTANCE DIRECTORY

CLASSIFIED c UL — CLASSIFIED FILL, VOID, OR CAVITY MATERIALS FOR USE IN THROUGH-PENETRATION FIRESTOP SYSTEMS. SEE UL DIRECTORY OF PRODUCTS CERTIFIED FOR CANADA AND UL FIRE RESISTANCE DIRECTORY

FM APPROVED

FEATURES

- **Economical** High performance without the high price!
- **Highly Intumescent** Expands up to 10X.
- **Excellent Smoke Seal**
- **Safe** for contact with plastics.
- **Water Resistant** Will not re-emulsify when dry.
- **Water-Based** for easy installation, cleanup, and disposal.
- **Acoustically Tested** Reduces noise transmission
- **Safe**... Low VOC's, No Solvents, Non-Halogenated

1. PRODUCT DESCRIPTION

SpecSeal® LCI Sealant is a versatile and economical intumescent product intended for firestopping a wide array of applications in small commercial or grouped residential construction and other structures with similar applications. SpecSeal® LCI Sealant is available in a single grade that has excellent caulking properties as well as high build properties on vertical or overhead surfaces. This single grade may be caulked (standard cartridge or bulk loaded), knifed or troweled. In addition, SpecSeal® LCI does not contain PCB's or asbestos.

SpecSeal® LCI Sealant is storage stable (when stored according to the manufacturer's recommendations), is asbestos free and will not separate or shrink when dried. SpecSeal® LCI Sealant will adhere to all common construction and penetrant materials and contains no solvents that might adversely effect plastic pipes or cable jackets.

2. APPLICATIONS

See Table A for a summary application list.

SpecSeal® LCI Sealant has a broad application base designed to seal a wide variety of common penetrations in light commercial and grouped residential construction. Penetrant types include insulated and non-insulated metallic pipes and tubes, non-metallic pipes and tubes, and common electrical service and power distribution, telephone, data, and TV cabling. This product is also used in conjunction with other SpecSeal® Products such as SpecSeal® Firestop Collars and Wrap Strips to protect larger plastic pipes.

3. PHYSICAL PROPERTIES

See Table B.

4. PERFORMANCE

SpecSeal® LCI Sealant is the basis for systems that meet the exacting criteria of ASTM E814 (UL1479) as well as to the time-temperature requirements of ASTM E119 (UL263). LCI provides up to a 2-hour fire rating for typical service penetrations through concrete or wood floors, concrete or masonry walls, as well as gypsum board walls (3-hour for metallic pipe, conduit and tubing). LCI meets Class A finish requirements for Flame Spread and Smoke Development when tested in accordance with ASTM E84 (UL723). LCI Sealant is also acoustically tested, demonstrating excellent sound attenuation properties.

5. SPECIFICATIONS

The firestopping sealant shall be a water-resistant, intumescent latex sealant. The sealant when exposed to high heat or flame shall exhibit a free expansion of up to 8 times its original volume. The firestopping sealant shall contain no water soluble nor hygroscopic ingredients and shall be acoustically tested. The sealant shall be UL Classified and tested to the requirements of ASTM E814 (UL1479) and shall meet Class A finish requirements when tested in accordance with ASTM E84 (UL723).

SPECIFIED DIVISIONS

DIV.	7	07840	Through-Penetration Firestopping
DIV.	13	13900	Special Construction Fire Suppression & Supervisory Systems
DIV.	15	15250	Mechanical Insulation – Fire Protection
DIV.	16	16050	Basic Electrical Materials & Methods

Table A: APPLICATIONS

- **Metallic Pipes** including steel, iron, or copper pipe and tubing.
- **Nonmetallic Pipes, Conduits & Tubing** including PVC, CPVC, ABS, and PEX.
- **Electrical & Electronic Cabling** including service entrance, power distribution, computer, telephone, and television.
- **Metal Ductwork** including HVAC, bath and dryer vents.
- **Insulated Pipes** including heating, cooling, and condensation applications.
- **Complete Wood Floor firestopping package** for electrical, plumbing, HVAC, telephone, and television.

Table B: Physical Properties

Product Name	Series LCI Sealant
Color	Pale Red
Odor	Mild Latex
Density	9.0 Lb/Gal
pH	9.0
Expansion Begins	320°F (160°C)
Volume Expansion	10X Free Expansion
In-Service Temp.	≤ 130°F (54°C)
Flame Spread	0*
Smoke Development	5*
STC Rating	50
VOC Content**	0.00lbs/gal (0.0 g/l)

* Tested to ASTM E84 (UL723) at 14% surface coverage (modified test for sealants and caulks)

**ASTM D 3960 and EPA Federal Reference Method 24

Fig 1: METALLIC PIPES - Concrete/Masonry Floors & Walls

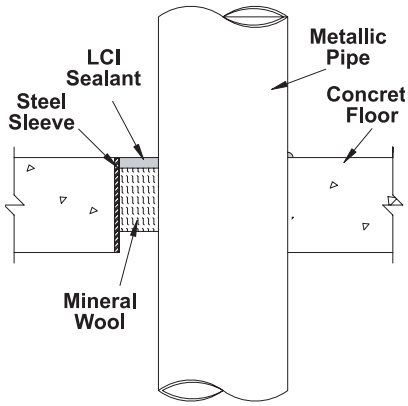

UL System No. C-AJ-1353
F Rating: 3 Hr • T Rating: 0 Hr
Steel or Iron Pipe: <12″, Copper Pipe: <4″
Annulus: 0″ to 2″
Sealant Depth: 1/4″
Forming Material: Nom 4 pcf mineral wool (2 ¼" Depth)

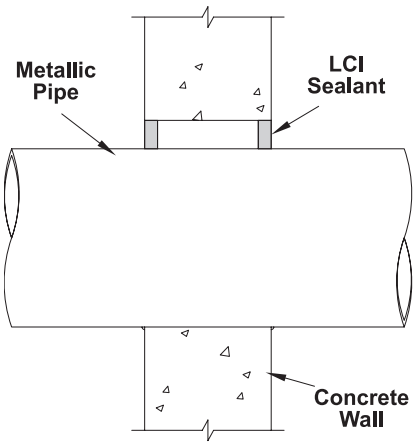

UL System No. W-J-1098
F Rating: 2 Hr • T Rating: 1/4, 3/4 & 1 Hr
Steel or Iron Pipe: <8″, Copper Pipe: <4″
Steel or Iron Pipe: <12", Copper Pipe: <4″
Annulus: 0″ to 2″
Sealant Depth: 5/8″

Fig 2: INSULATED METALLIC PIPES - Concrete/Masonry Floors & Walls

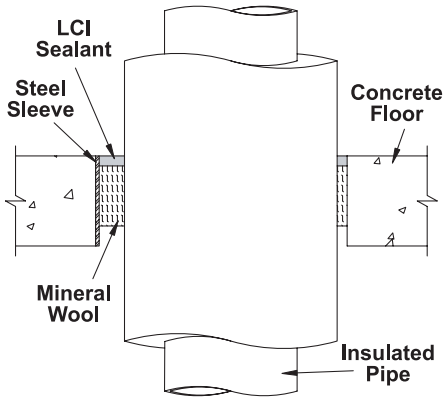

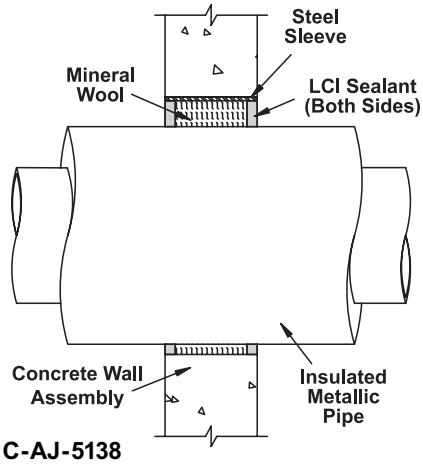

UL System No. C-AJ-5138
F Rating: 2 Hr • T Rating: ¾ or 1 Hr
Steel or Iron Pipe: 6″, Copper Pipe: 4″
Pipe Covering: Max. 2″ fiber glass or mineral wool pipe insulation.
Annulus: ¼″ to 1-5/8″ • Sealant: ½″
Forming: Nom. 4 pcf mineral wool (3″ depth)

Table C: SEALANT REQUIREMENTS IN CUBIC INCHES PER 1/4 INCH OF INSTALLED DEPTH*

Pipe Size		Diameter of Opening (in.)											
Trade Size	Pipe O.D.	1.5	2.0	3.0	4.0	5.0	6.0	7.0	8.0	10	12	14	26
0.5″	0.840	0.3	0.6	1.6	3.0	4.8	6.9	9.5	12.4	19.5	28.1	38.3	132.6
1″	1.315	0.1	0.4	1.4	2.8	4.6	6.7	9.3	12.2	19.3	27.9	38.1	132.4
1.5″	1.900			1.1	2.4	4.2	6.4	8.9	11.9	18.9	27.6	37.8	132.0
2″	2.375			0.7	2.0	3.8	6.0	8.5	11.5	18.5	27.2	37.4	131.6
2.5″	2.875			0.1	1.5	3.3	5.4	8.0	10.9	18.0	26.7	36.9	131.1
3″	3.500				0.7	2.5	4.7	7.2	10.2	17.2	25.9	36.1	130.3
3.5″	4.000					1.8	3.9	6.5	9.4	16.5	25.1	35.3	129.6
4″	4.500					0.8	3.0	5.6	8.5	15.6	24.2	34.4	128.7
6″	6.625							1.1	4.0	11.1	19.7	29.9	124.2
8″	8.625									4.9	13.6	23.8	118.0
10″	10.750										5.6	15.8	110.0
12″	12.750											6.6	100.8
24″	24.000												19.6

***Different Sealant Depth?**

1/2″	*Multiply by 2*
5/8″	*Multiply by 2.5*
1″	*Multiply by 4*
1-1/4″	*Multiply by 5*

IMPORTANT NOTE: This table is for estimation purposes only. Consult UL Fire Resistance Directory or STI Product & Application Guide for specific installation requirements and limitations

Fig. 3: ELECTRICAL, DATA OR COMMUNICATIONS - Gypsum Walls

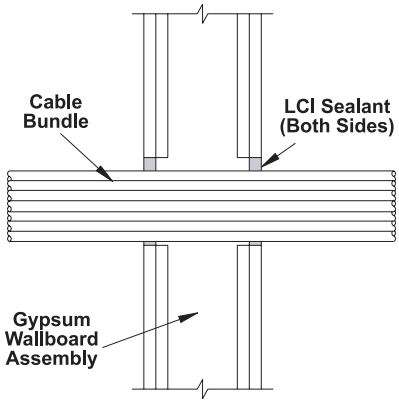

UL System No. W-L-3169
F Rating: 1, 2 Hr • T Rating: ¼ and ¾
Up to 4″ cable bundle
Annulus: 0″ to 4½″ • Sealant: 5/8″

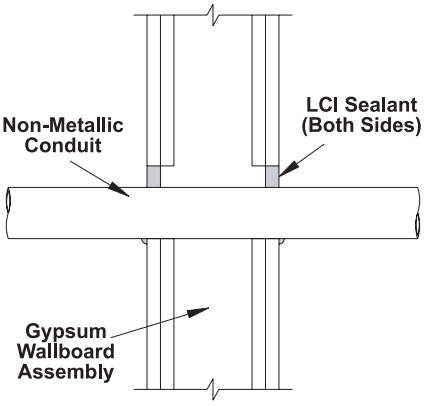

UL System No. W-L-2241
F Rating: 1, 2 Hr • T Rating: ¼, 1, 1-3/4
<2″ Rigid PVC or ENMT, CPVC, ABS
Annulus: 0-1″ • Sealant 5/8″

Fig. 4: BARE & INSULATED METALLIC PIPES - Wood Floor Assemblies

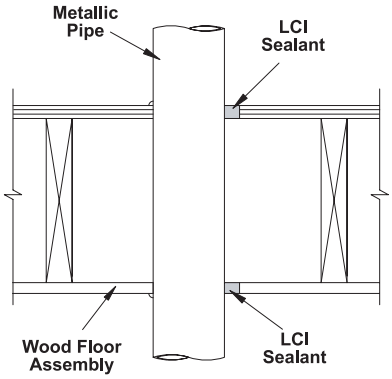

UL System No. F-C-1074
F Rating: 1 & 2 Hr • T Rating: ¼, ½ and 1 Hr
Steel, Iron or Copper: 4″ • Chase wall optional.
Annulus: 0″ to 1″ • Sealant: 5/8″ bottom, ¾″ top

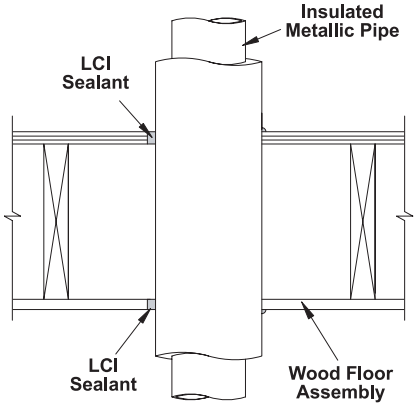

UL System No. F-C-5043
F Rating: 1 Hr • T Rating: ¾ and 1 Hr
Steel, Iron or Copper: 4″
Pipe covering: 1″ Fiber Glass, Mineral fiber or AB/PVC • Chase wall optional.
Annulus: 0″ to 1″ • Sealant: 5/8″ bottom, ¾″ top.

Fig. 5: BARE & INSULATED METALLIC PIPES - Gypsum Walls

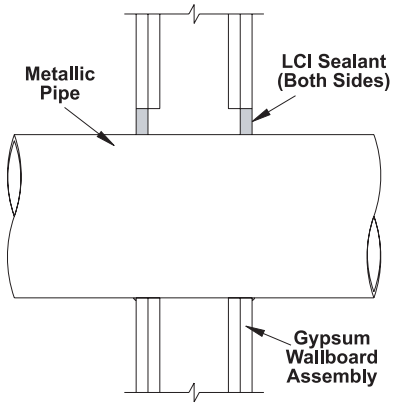

UL System No. W-L-1222
F Rating: 1, 2 Hr • T Rating: ¼, ¾, 1 Hr
Steel or Iron pipe: 8″, Copper pipe: 4″
Annulus: 0″ to 2″ • Sealant: 5/8″

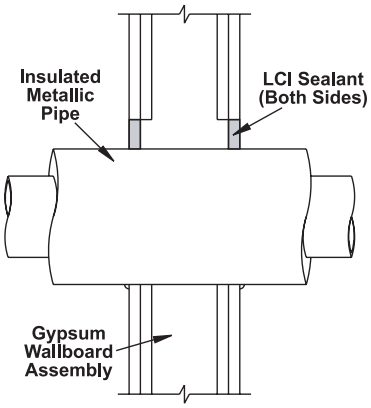

UL System Nos. W-L-5121, W-L-5122
F Rating: 1, 2 Hr • T Rating: ¼ and 1 Hr
Steel or Iron pipe: 6″, Copper pipe: 4″
Pipe covering: Max. 2″ fiber glass, ¾″ AB/PVC or 2″ mineral fiber
Annulus: 0″ to 1-1/2″ • Sealant: 5/8″

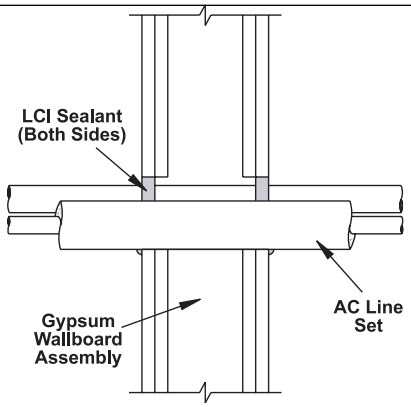

UL System No. W-L-8025
F Rating: 1, 2 Hr • T Rating: ¼ Hr
AC Line Set: Two copper tubes, one with ¾″ AB/PVC and thermostat wire
Annulus: 0″ to 1″ • Sealant 5/8″

6. INSTALLATION INSTRUCTIONS

GENERAL: Areas to be protected must be clean and free of oil, loose dirt, rust or scale. Installation temperatures must be between 35°F (2°C) and 100°F (38°C). Allow product to dry a minimum of 24 hours before exposure to moisture.

SYSTEM SELECTION: Selection of an appropriate firestop system design is critical to the fire protection process. Space limitations preclude highly detailed information pertaining to individual application systems. Please consult the Product & Application Guide as well as the UL® Fire Resistance Directory for additional information.

FORMING: Some installations may require forming as either an integral part of the system or as an option to facilitate installation. In systems where forming is required, mineral wool batts with a minimum nominal density of 4 PCF are generally required. Cut forming material oversize to allow for tight packing. Position forming material to allow for the proper depth of fill material.

FILL MATERIAL: SpecSeal® LCI may be installed by caulking using a standard caulking gun or from bulk containers using a bulk loading caulk gun, or by manually troweling using a mason's trowel or putty knife. If the sealant tends to pull back from a surface, clean the surface with a damp rag or sponge and reapply. Work sealant into all areas exercising care to eliminate voids or seams. The surface of the sealant can be smoothed using a putty knife dipped in water. Adding water to the sealant itself is not recommended. Sealant (when dry) may be painted using most non-solvent based paints.

In gypsum wallboard penetrations, apply a minimum cove bead of 1/4" at the interface of the penetrant with both exterior wall surfaces.

SMOKE SEALING: In some applications including firestop collars, SpecSeal® LCI Sealant is recommended as a smoke seal. It is suggested in these applications that the sealant be applied to both sides of walls. In floor applications, a sealing bead is suggested top and bottom.

LIMITATIONS: SpecSeal LCI Sealant is water-based and cures through the evaporation of water. Low temperatures as well as high humidity may retard drying. Non-porous or impermeable backing materials, plates, or coatings may retard the drying process. Do not paint or seal in any way that prevents contact with air until sealant has dried through completely.

7. MAINTENANCE

No maintenance is normally required, however a periodic inspection of rated barriers is recommended to make sure that any new openings, modifications of previously installed firestops, or areas exhibiting physical damage, have been properly sealed or repaired. Subsequent sealing or repairs should be accomplished using SpecSeal® products per the original approved design.

RETROFIT: When adding or removing penetrants, care should be taken to minimize damage to the seal. Reseal using SpecSeal® products per the approved design. NOTE: New penetrants of a different nature than the original design may require a totally new firestop design or extensive modifications to the existing design. Reseal all openings as per the requirements of the modified design.

8. TECHNICAL SERVICE

Specified Technologies Inc. provides toll free technical support to assist in product selection and appropriate installation design. UL Systems, Material Safety Data Sheets and other technical information is available at the Technical Library at www.stifirestop.com or through STI's automated attendant fax back system at 888-526-6800.

9. PRECAUTIONARY INFORMATION

Consult Material Safety Data Sheet for additional information on the safe handling and disposal of this material.

10. AVAILABILITY

SpecSeal® Series LCI Sealant is available from authorized STI distributors. Consult factory for the names and locations of the nearest sales representatives or distributors. Available packages

TABLE D: ORDERING INFORMATION

CAT. NO.	DESCRIPTION	
LCI300	Sealant 10.1 oz Tube	18.2 Cu In (300 ml)
LCI305	Sealant 5 Gal Pail	1,155 Cu In (19.0 Liters)
LCI320	Sealant 20 oz Sausage	36 Cu in. (592 ml)
LCI329	Sealant 29 oz Quart Tube	52 Cu in. (858 ml)

Additional SpecSeal Products...

Series SSS Sealant
The industry's most versatile sealant provides the firestopping solutions for a wide range of combustible and noncombustible applications. Water-based intumescent sealant expands up to 8X!

Intumescent Wrap Strips
Two grades of intumescent wrap strips provide an unmatched combination of flexibility, economy, and expansion (up to 30X). Systems for plastic pipes including FR Polypropylene up to 8" trade size!

SSC & LCC Firestop Collars
Easy to install, economical protection for ABS and PVC pipes (both solid and foam core) as well as CPVC, PVDF, and FRPP. LCC Collars are available up to 4" and SSC Collars are available up to 6" trade size.

Firestop Mortar
Lightweight, versatile and economical! The best choice for large or complex installations.

SSP Firestop Putty
Available both in bar form and in pads, putty provides easy retrofit for through-penetrations and economical protection for electrical boxes.

Pensil® Silicones
Sealants and foam for through-penetrations and construction joints. Unexcelled aging characteristics and flexibility.

Elastomeric Joint Seals
New economical products for sealing construction joints. Choose caulk or spray applied products tested to UL2079.

CITY OF NEW YORK MEA 130-96M

Important Notice: All statements, technical information, and recommendations contained herein are based upon testing believed to be reliable, but the accuracy and completeness thereof is not guaranteed.
WARRANTY: Specified Technologies Inc. manufactures its goods in a manner to be free of defects. Should any defect occur in its goods (within one year), Specified Technologies Inc., upon prompt notification, will at its option, exchange or repair the goods or refund the purchase price.
Limitations and Exclusions: THIS WARRANTY IS IN LIEU OF ALL OTHER REPRESENTATIONS EXPRESSED OR IMPLIED (INCLUDING THE IMPLIED WARRANTIES OF MERCHANTABILITY OR FITNESS FOR USE) AND UNDER NO CIRCUMSTANCES SHALL SPECIFIED TECHNOLOGIES INC. BE RESPONSIBLE FOR ANY INCIDENTAL OR CONSEQUENTIAL PROPERTY DAMAGE OR LOSSES. PRIOR TO USE, THE USER SHALL DETERMINE THE SUITABILITY OF THE PRODUCT FOR ITS INTENDED USE, AND THE USER ASSUMES ALL RISKS AND LIABILITY FOR SUBSEQUENT USE.
No statement or recommendation not contained herein shall have any force or effect unless in an agreement signed by officers of seller and manufacturer.

STI Specified Technologies Inc.

200 Evans Way • Somerville, NJ 08876

Phone: (800) 992-1180 • Fax: (908) 526-9623

STI on the WEB: www.stifirestop.com

Specified Technologies, Inc.

PRODUCT DATA SHEET

SpecSeal FIRESTOP PRODUCTS Series SSP Putty & Putty Pads

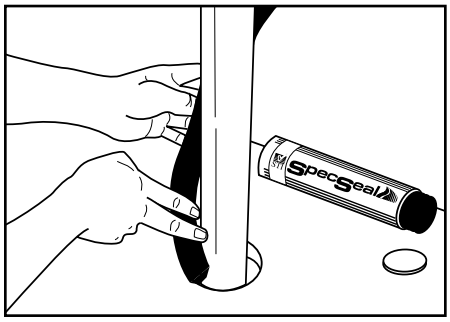

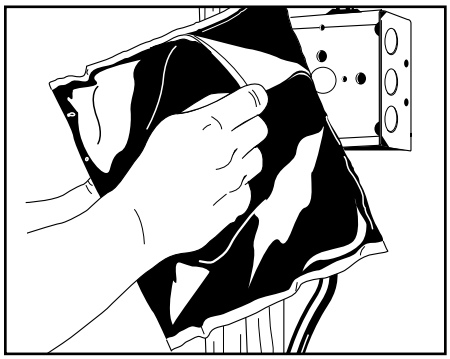

CLASSIFIED UL

FILL, VOID OR CAVITY MATERIALS CLASSIFIED BY UNDERWRITERS LABORATORIES INC. ® FOR USE IN THROUGH-PENETRATION FIRESTOP SYSTEMS.

SEE UL FIRE RESISTANCE DIRECTORY

3L73 UNDERWRITERS LABORATORIES INC.® CLASSIFIED WALL PROTECTION MATERIAL. SEE PRODUCT CATEGORY IN UL FIRE RESISTANCE DIRECTORY

CLASSIFIED c UL

CLASSIFIED FILL, VOID, OR CAVITY MATERIALS FOR USE IN THROUGH-PENETRATION FIRESTOP SYSTEMS. SEE UL DIRECTORY OF PRODUCTS CERTIFIED FOR CANADA AND UL FIRE RESISTANCE DIRECTORY

FM APPROVED

FEATURES

- **Non-Hardening** Easy retrofit!
- **Two Stage Intumescence** features aggressive expansion.
- **Endothermic Fillers** absorb heat & release water.
- **Highly Adhesive Formula** Stays put. Allows movement.
- **Soft & Pliable** for easy installation.
- **No Water-Soluble Expansion Ingredients** means better water resistance!
- **Sound Deadening!** Excellent sound attenuation properties. Reduces noise transmission.

1. PRODUCT DESCRIPTION

SpecSeal® Series SSP Putty is a non-hardening, intumescent compound designed to seal through-penetrations as well as certain membrane penetrations against the spread of fire, smoke and toxic gasses. SpecSeal® Putty expands up to 8 times its original size when exposed to high temperatures or flames.

Requiring no tools, SpecSeal® Putty is soft and pliable making it easy to install by hand packing into openings. Its aggressive adhesion makes it suitable for use with all common construction materials as well as cable jacketing and pipes. SpecSeal® Putty remains soft and easy to reuse or retrofit.

SpecSeal® Putty Pads provide this same level of protection in a release lined pad for easy application to electrical boxes or other penetrants. The pad is conveniently sized to fit a typical 1-1/2" deep 4S box with no cutting or piecing required. Faced on both sides with a convenient poly liner, SpecSeal® Putty Pads are easily applied with no mess or excessive residue.

2. APPLICATIONS

Series SSP Putty and Putty Pads are used to seal through-penetrations as well as construction gaps and blank openings. SpecSeal® Putty Pads are used to seal around electrical boxes to reduce sound transmission (see Technical Update) and increase fire resistance. These pads also provide a metered method of application when sealing through-penetrations and in some applications, are used to provide a cushion to allow movement due to settling, expansion and contraction, or vibration.

3. PHYSICAL PROPERTIES

See Table A.

4. PERFORMANCE

SpecSeal® Series SSP Putty is the basis for systems that meet the exacting criteria of ASTM E814 (UL1479). Systems have been tested for all common forms of construction and most common penetrants with ratings up to 3 hours. Sound attenuation properties have also been tested as per ASTM C919 and E90.

Additionally, SpecSeal® Putty Pads have been tested to UL263 (ASTM E119, NFPA 251) and are classified for up to 2 hours as a Wall Opening Protective Material for

5. SPECIFICATIONS

The firestopping putty shall be a one-part, two-stage intumescent, non-hardening compound. The putty, when exposed to high heat or flame shall be capable of expanding a minimum of 5 times. Range of continuing expansion shall be from 230°F to >1,000°F. The putty shall be soft and pliable with aggressive adhesion and shall not contain any water-soluble intumescent ingredients. The putty shall be UL Classified and/or FM Systems Approved and tested to the requirements of ASTM E814 (UL1479).

SPECIFIED DIVISIONS

DIV.	7	07840	Through-Penetration Firestopping
DIV.	13	13900	Special Construction Fire Suppression & Supervisory Systems
DIV.	15	15250	Mechanical Insulation – Fire Protection
DIV.	16	16050	Basic Electrical Materials & Methods

Table A:
PHYSICAL PROPERTIES

Product Name	Series SSP Putty
Color	Red
Odor	None
Density	1.45
Solids	100%
Expansion Begins	230°F
Volume Expansion	> 500% (free expansion)
In-Service Temp.	130°F
STC Rating	51
VOC Content**	0.00 lbs/gal (0.0g/l)

**ASTM D 3960 and EPA Federal Reference Method 24.

use with both metallic and nonmetallic outlet or switch boxes installed in gypsum wallboard assemblies (steel and wood stud assemblies). Boxes protected with SpecSeal® Putty Pads have been successfully tested with box spacing reduced to less than 16". (Not tested nor approved for boxes installed directly back to back).

5. SPECIFICATIONS

See Page 1

6. INSTALLATION INSTRUCTIONS

GENERAL: Areas to be protected must be clean and free of oil, loose dirt, rust or scale. Installation , storage, and in-service temperatures must be below 130°F. No drying or curing is required.

SYSTEM SELECTION: Please consult the STI Product and Application Guide as well as the UL® Fire Resistance Directory for applicable through-penetration firestop systems.

FORMING: Some installations may require forming as either an integral part of the system or as an option to facilitate installation. In systems where forming is required, mineral wool batts (1-1/2" nom. thickness, 4 lb./cu. ft. density) are recommended. Some gypsum wallboard systems utilize fiberglass. Cut forming material oversize to allow for tight packing. Recess forming material at a depth which allows for the proper depth of fill material.

Fig. 1: METALLIC PIPE PENETRATIONS - CONCRETE/MASONRY FLOOR

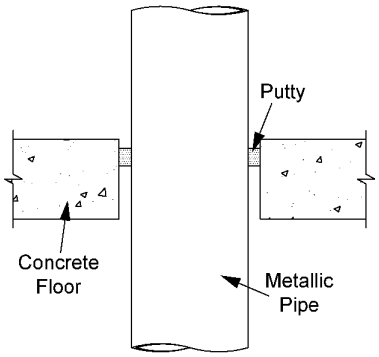

UL System No. C-AJ-1090
F Rating: 2 hr • T Rating: 0 hr
Steel or Iron Pipe: 6", EMT 4"
Annulus: Nominal 11/16"
Putty Depth: 1"
Forming Material: Optional

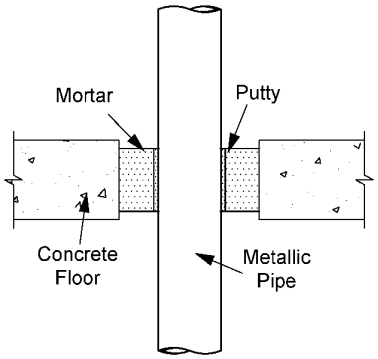

UL System No. C-AJ-8055
F Rating: 2 hr • T Rating: 0 hr
Steel or Iron Pipe: 6", EMT 4"
Annulus: 1" to 6 1/2"
SpecSeal Mortar Depth: 3 1/2"
SpecSeal Putty Pad: 1 Layer Encircling

Fig. 2: METALLIC PIPE PENETRATIONS - WALLS

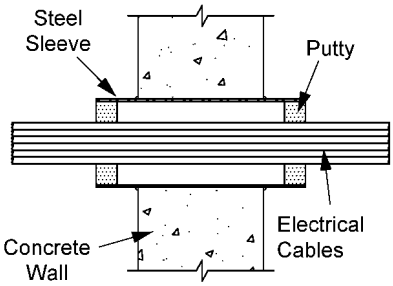

UL System No. W-J-3090
F Rating – 2 Hr • T Rating – 3/4 Hr
Electrical, Telephone or Data Cables
Annulus: Min 0"
Putty Depth: 1" of Putty on both sides.

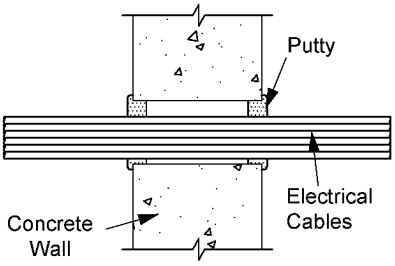

UL System No. W-J-3046
F Rating – 2 Hr • T Rating – 0 Hr
Electrical, Telephone or Data Cables
Annulus: 1/4" to 3/4"
Putty Depth: 5/8" of Putty on both sides.

Fig. 3: CABLE PENETRATIONS - CONCRETE/MASONRY FLOORS & WALLS

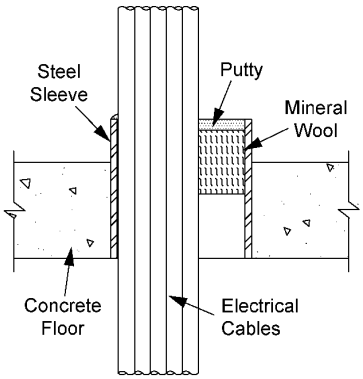

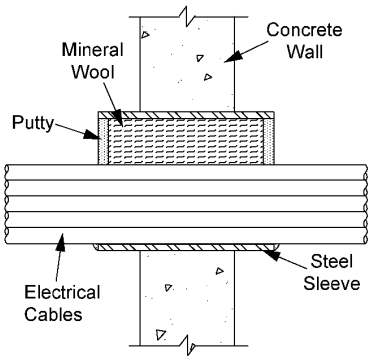

UL System No. C-AJ-3154
F Rating – 1, 2, 3 & 4 Hr • T Rating – 0, 1/2 & 2 3/4 Hr
Optional Sleeve - PVC or Steel • Electrical, Telephone or Data Cables • Annulus: 0" to 2"
Forming Material: Nom 4 pcf mineral wool • Putty Depth: 1/2" of Putty; 1" for 4 Hr

FILL MATERIAL: SpecSeal® Putty may be installed by hand packing into the penetration. Care should be exercised to work the putty into and against all contact surfaces. Install putty to required depth. Work putty into all areas, exercising care to eliminate voids or seams. Where possible, space all penetrants adequately to allow putty to be packed into all voids and assure a good smoke seal. Most firestop system designs utilize a 1" depth of SpecSeal® Putty.

PUTTY PADS: SpecSeal® Putty Pads are available as a 7.25" x 7.25" x 3/16" poly release faced pad for protection of recessed electrical boxes and as a through-penetration sealant. The pad is sized to fit a common 1-1/2" deep 4S electrical box. To install remove release liner from one side of pad. Align edge of pad to top of box and center pad. Adhere pad to top of box and bring pad down over the back of the box. Adhering pad to all outer surfaces will create excess material at the corners. Pinch pleat material together and fold against sides of box or trim off as desired. Putty pad must be applied to a uniform depth of 3/16" (one layer of pad) over the exterior surface of box for both 1 and 2 hour applications. Optionally, additional putty may be packed into conduit fittings to prevent the transmission of smoke through the conduit system.

Pads may also be used in through-penetrations. Strips of pad may be cut off and packed around penetrants. Pad strips may also be applied to penetrants in a mortar system to create a firestop as well as a cushion to absorb movement due to expansion and contraction or vibration.

Fig. 4: CABLE PENETRATIONS - GYPSUM BOARD WALLS

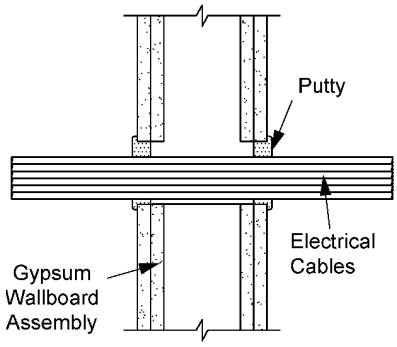

UL System No. W-L-3135
F Rating – 1 & 2 Hr • T Rating – 0 Hr
Electrical, Telephone or Data Cables
Annulus: 1/4" to 3/4"
Putty Depth: 5/8" of Putty on both sides.

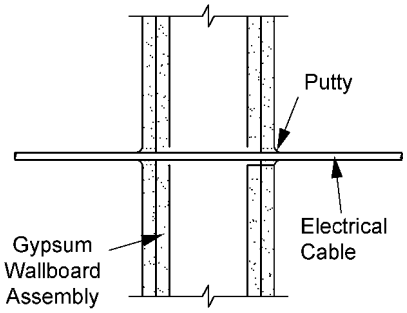

UL System No. W-L-3024
F Rating – 1 & 2 Hr • T Rating – 0,1/2, 1 & 2 Hr
Electrical, Telephone or Data Cables
Annulus: 0" to 1/4"
Putty Depth: 5/8" of Putty on both sides.

Fig. 5: EXAMPLE OF MAINTAINING STC VALUES OF WALL AND CREATING AN EFFECTIVE SOUND BARRIER

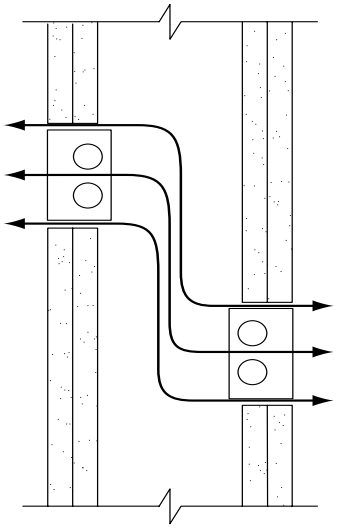

Arrows show path of sound travel.

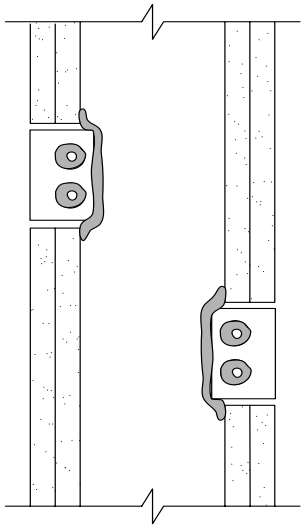

Putty pad reduces sound transmission by blocking path of sound travel.

INSTALLATION OF PUTTY PADS ON ELECTRICAL BOXES (Protective Wall Opening Material)

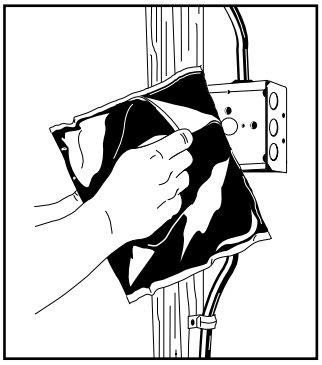

STEP 1

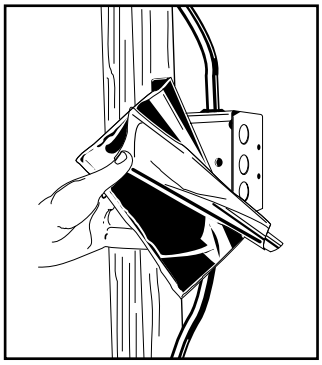

STEP 2

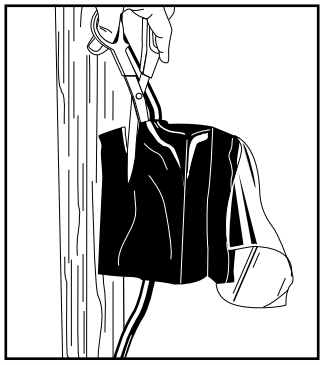

STEP 3

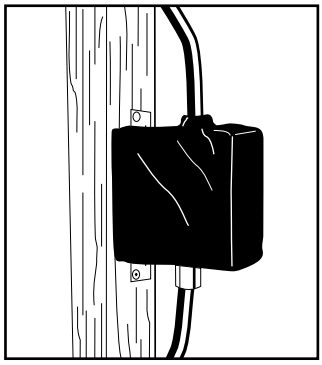

STEP 4

Remove poly liner from one side of pad (Step 1). Align pad to the side of box partially overlapping the stud and adhere. Working to the opposite side of the box to the edges (Step 2). If wall membrane is in place, pack putty into gaps between box and gypsum board slightly overlapping inner wallboard surface. If membrane is to be installed after pad installation, overlap front edge of box so that putty will be compressed around edges of box as wallboard is installed. Cut slits in pad to fit around conduits or cables (Step 3). Press pad to surface of top, bottom, and sides of box (Step 4). Trim excess at corners and apply to conduit fittings connected to the box. Remove exposed poly liner. Optionally, putty may be packed into inside of conduit fittings to prevent passage of smoke.

CLEAN UP: Remove excess material from all contact surfaces immediately. Clean hands or skin using a waterless hand cleaner. When using water-emulsifiable soaps, apply soap and work over areas of skin contact prior to applying water.

7. MAINTENANCE INSPECTION

Installations should be inspected periodically for subsequent damage. Any damage should be repaired using SpecSeal® products per the original approved design.

Retrofit: When adding or removing penetrants, care should be taken to tightly reseal the penetration. Reseal using SpecSeal® Putty per the approved design.

8. TECHNICAL SERVICE

Specified Technologies Inc. provides toll free technical support to assist in product selection and appropriate installation design. UL Systems, Material Safety Data Sheets and other technical information is available at the Technical Library at www.stifirestop.com or through STI's automated attendant fax back system at 888-526-6800.

9. PRECAUTIONARY INFORMATION

Consult Material Safety Data Sheet for additional information on the safe handling and disposal of this material. Wash areas of skin contact with soap and water. Avoid contact with eyes. DO NOT APPLY TO EXPOSED ELECTRICAL CONDUCTORS.

10. AVAILABILITY

SpecSeal® Series SSP Putty is available from authorized STI distributors nationwide. Consult factory for the names and locations of the nearest sales representatives or distributors.

TABLE C: ORDERING INFORMATION

CAT. NO.	DESCRIPTION	CASE QUAN.
SSP100	36 in^3 (0.6 liter) bar	6
SSP4S	7.25˝ x 7.25˝ x 3/16˝ pad	20
SSP9S	9.00˝ x 9.00˝ x 3/16˝ pad	20

Additional SpecSeal Products...

Series SSS Sealant
The industry's most versatile sealant provides the firestopping solutions for a wide range of combustible and noncombustible applications. Water-based intumescent sealant expands up to 8X!

Series LCI Sealant
A versatile and economical intumescent product for firestopping a wide array of applications in small commercial or grouped residential construction.

SSB Firestop Pillows
Durable, monolithic pillows for installations requiring quick and easy retrofitting. Systems designed for pipes, cables and cable tray in all types of construction!

Intumescent Wrap Strips
Two grades of intumescent wrap strips provide an unmatched combination of flexibility, economy, and expansion (up to 30X). Systems for plastic pipes including FR Polypropylene up to 8" trade size!

Pensil® Silicones
Sealants and foam for through-penetrations and construction joints. Unexcelled aging characteristics and flexibility.

Firestop Mortar
Lightweight, versatile and economical! The best choice for large or complex installations.

Molded Firestop Collars
Easy to install, economical protection for ABS and PVC pipes (both solid and foam core) as well as CPVC, PVDF, and FRPP. Collars available up to 6" trade size.

Elastomeric Joint Seals
New economical products for sealing construction joints. Choose caulk or spray applied products tested to UL2079.

CITY OF NEW YORK MEA 130-96M

Important Notice: All statements, technical information, and recommendations contained herein are based upon testing believed to be reliable, but the accuracy and completeness thereof is not guaranteed.
WARRANTY: Specified Technologies Inc. manufactures its goods in a manner to be free of defects. Should any defect occur in its goods (within one year), Specified Technologies Inc., upon prompt notification, will at its option, exchange or repair the goods or refund the purchase price.
Limitations and Exclusions: THIS WARRANTY IS IN LIEU OF ALL OTHER REPRESENTATIONS EXPRESSED OR IMPLIED (INCLUDING THE IMPLIED WARRANTIES OF MERCHANTABILITY OR FITNESS FOR USE) AND UNDER NO CIRCUMSTANCES SHALL SPECIFIED TECHNOLOGIES INC. BE RESPONSIBLE FOR ANY INCIDENTAL OR CONSEQUENTIAL PROPERTY DAMAGE OR LOSSES. PRIOR TO USE, THE USER SHALL DETERMINE THE SUITABILITY OF THE PRODUCT FOR ITS INTENDED USE, AND THE USER ASSUMES ALL RISKS AND LIABILITY FOR SUBSEQUENT USE.
No statement or recommendation not contained herein shall have any force or effect unless in an agreement signed by officers of seller and manufacturer.

STI Specified Technologies Inc.
200 Evans Way • Somerville, NJ 08876
Phone: (800) 992-1180 • Fax: (908) 526-9623
Facts-On-Demand: (888) 526-6800
STI on the WEB: www.stifirestop.com