FIRESTOP SUBMITTAL PACKAGE

Sprinkler

PROJECT:

_____

_____

_____

_____

_____

_____

SUBMITTED BY:

Specified Technologies Inc.

SpecSeal FIRESTOP PRODUCTS

200 Evans Way • Somerville, NJ 08876 • (800) 992-1180 • (908) 526-8000 • Fax (908) 526-9623

www.stifirestop.com

Sprinkler

Concrete Floors

SYSTEM	DESCRIPTION	PRODUCT(S)
C-AJ-1353	Max. 12” metallic sprinkler pipe.	LCI Sealant
C-AJ-2292	Max. 2” CPVC sprinkler pipe.	LCI Sealant

Concrete Walls

SYSTEM	DESCRIPTION	PRODUCT(S)
C-AJ-1353	Max. 12” metallic sprinkler pipe.	LCI Sealant
C-AJ-2292	Max. 2” CPVC sprinkler pipe.	LCI Sealant
W-J-1098	Max. 8” metallic sprinkler pipe. Caulk and walk.	LCI Sealant

Gypsum Board Walls

SYSTEM	DESCRIPTION	PRODUCT(S)
W-L-1222	Max. 8” metallic sprinkler pipe. Caulk and walk.	LCI Sealant
W-L-2241	Max. 2” CPVC sprinkler pipe. Caulk and walk.	LCI Sealant

General Certificate of Conformance

Product Data Sheets

Series LCI Intumescent Sealant

Material Safety Data Sheets

Series LCI Intumescent Sealant

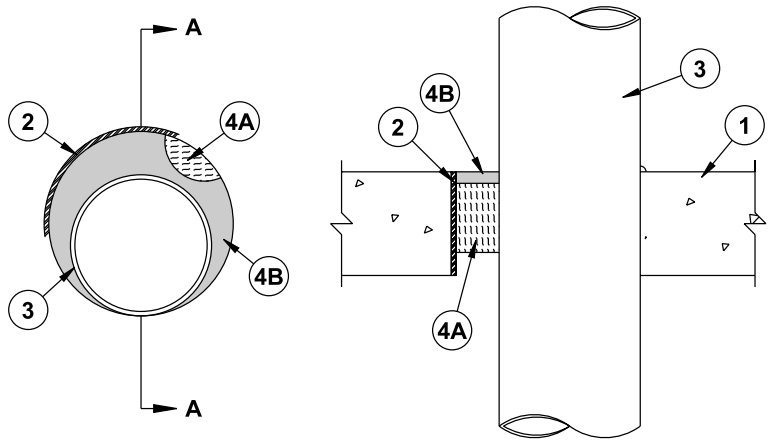

Section A-A

System No. C-AJ-1353
November 30, 2001
F Rating — 3 Hr
T Rating — 0 Hr

1. **Floor or Wall Assembly** — Min 2-1/2 in. thick reinforced lightweight or normal weight (100-150 pcf) concrete floor. Floor may also be constructed of any min 6 in. thick hollow-core **Precast Concrete Units*.** Wall may also be constructed of any UL Classified **Concrete Blocks*.** Max diam of opening is 10 in. Max diam of opening in floors constructed of hollow-core is 7 in. See **Concrete Blocks** (CAZT) or **Precast Concrete Units** (CFTV) categories in the Fire Resistance Directory for names of manufacturers.
2. **Steel Sleeve** — (Optional) — Nom 10 in. diam (or smaller) Schedule 10 (or heavier) steel pipe cast or grouted into floor or wall assembly. Steel sleeve may be installed flush or may project a max 2 in. beyond the floor or wall surfaces.
3. **Through Penetrant** — One metallic pipe, conduit or tube to be installed eccentrically or concentrically within the firestop system. The annular space between the pipe, conduit or tube and the periphery of the opening shall be min 0 in. (point contact) to max 2 in. Pipe, conduit or tube to be rigidly supported on both sides of the floor or wall assembly. The following types and sizes of metallic pipes, conduits and tubes may be used:
   A. **Steel Pipe** — Nom 12 in. diam (or smaller) Schedule 5 (or heavier) steel pipe.
   B. **Iron Pipe** — Nom 12 in. diam (or smaller) cast or ductile iron pipe.
   C. **Conduit** — Nom 6 in. diam (or smaller) rigid steel conduit, nom 4 in. diam (or smaller) steel electrical metallic tubing (EMT) or nom 4 in. diam (or smaller) flexible steel conduit.
   D. **Copper Pipe** — Nom 4 in. diam (or smaller) Regular (or heavier) copper pipe.
   E. **Copper Tube** — Nom 4 in. diam (or smaller) Regular L (or heavier) copper tube.

3A. **Through Penetrating Product*** — **Flexible Metal Piping** — As an alternate to Item 3, one nom 2 in. diam (or smaller) flexible steel pipe to be installed either concentrically or eccentrically within the firestop system. The annular space between the pipe, conduit or tube and the periphery of the opening shall be min 0 in. (point contact) to max 2 in. Pipe to be rigidly supported on both sides of the floor or wall assembly.

Omega Flex Inc
Titeflex Corp
A Bundy Co
Ward Mfg Inc

4. **Firestop System** — The firestop system shall consist of the following:
   A. **Packing Material** — Min 4 pcf mineral wool batt insulation compressed and tightly packed to min 2-1/4 in. thickness. Packing material recessed from top surface of floor or both surfaces of wall as required to accommodate fill material (Item 4B). In floors constructed of hollow-core precast concrete units, packing material to be recessed from both top and bottom surfaces of floor, as required to accommodate fill material (Item 4B). When steel sleeve projects from top of floor or from both sides of wall, the thickness of mineral wool batt packing material should be increased by an amount equal to the distance that the sleeve extends past the floor or wall surface.
   B. **Fill, Void or Cavity Material*** — **Sealant** — Min 1/4 in. thickness of fill material applied within annulus, flush with top surface of floor assembly or top edge of steel sleeve. In walls, min 1/4 in. thickness of fill material applied flush with both surfaces of wall assembly or both ends of steel sleeve. In floors constructed of hollow-core precast concrete units, fill material installed symmetrically on both side of floor. At point contact location, apply min 1/4 in. diam bead of fill material at pipe/concrete interface or pipe/steel sleeve interface on top surface of floor or both surfaces of wall or precast concrete units.

Specified Technologies Inc — SpecSeal LCI Sealant

*Bearing the UL Classification Mark

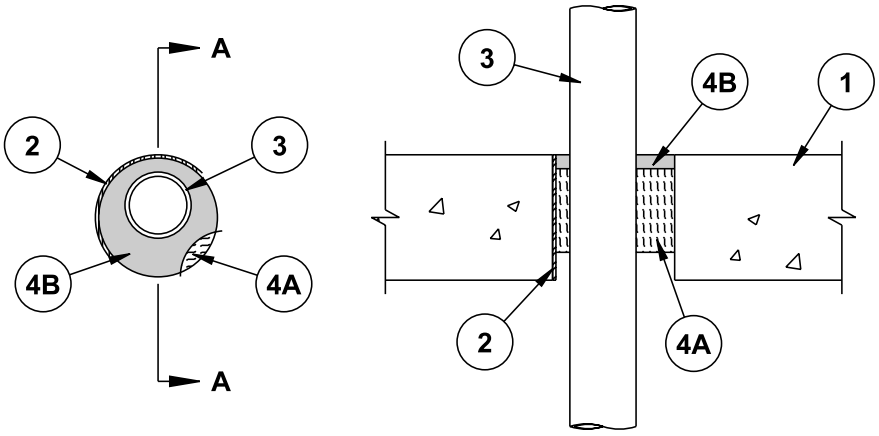

Section A-A

System No. C-AJ-2292
December 03, 2001
F Rating — 2 Hr
T Ratings — 0 and 2 Hr (See Item 2)

1. **Floor or Wall Assembly** — Min 4-1/2 in. thick reinforced lightweight or normal weight (100-150 pcf) concrete floor. Floor may also be constructed of any min 6 in. thick hollow-core **Precast Concrete Units*.** Wall may also be constructed of any UL Classified **Concrete Blocks*.** Max diam of opening is 4 in.
   See **Concrete Blocks** (CAZT) or **Precast Concrete Units** (CFTV) categories in the Fire Resistance Directory for names of manufacturers.
2. **Steel Sleeve** — (Optional) — Nom 4 in. diam (or smaller) Schedule 10 (or heavier) steel pipe cast or grouted into floor or wall assembly, flush with floor or wall surfaces**. When steel sleeve is used, T Rating is 0 hr. When steel sleeve is not used, T Rating is 2 hr.**
3. **Through Penetrant** — One nonmetallic pipe, conduit or tube to be installed eccentrically or concentrically within the firestop system. The annular space between the pipe, conduit or tube and the periphery of the opening shall be min 1/2 in. to max 1-1/8 in. Pipe, conduit or tube to be rigidly supported on both sides of the floor or wall assembly. The following types and sizes of nonmetallic pipes, conduits and tubes may be used:
   A. **Polyvinyl Chloride (PVC) Pipe** — Nom 2 in. diam (or smaller) Schedule 40 polyvinyl chloride (PVC) pipe for use in closed (process or supply) piping systems.
   B. **Chlorinated Polyvinyl Chloride (CPVC) Pipe** — Nom 2 in. diam (or smaller) SDR17 chlorinated polyvinyl chloride (CPVC) pipe for use in closed (process or supply) piping systems.
   C. **Rigid Nonmetallic Conduit+** — Nom 2 in. diam (or smaller) Schedule 40 PVC conduit installed in accordance with Article 347 of the National Electrical Code (NFPA 70).
   D. **Electrical Nonmetallic Tubing+** — Nom 2 in. diam (or smaller) PVC tubing installed in accordance with Article 331 of the National Electrical Code (NFPA 70).
4. **Firestop System** — The firestop system shall consist of the following:
   A. **Packing Material** — Min 3 in. thickness of min 4 pcf mineral wool batt insulation compressed and tightly packed into opening. Packing material recessed from top surface of floor or both surfaces of wall or precast concrete units.
   B. **Fill, Void or Cavity Material*** — **Sealant** — Min 1/2 in. thickness of fill material installed within annulus, flush with top surface of floor or both surfaces of wall assembly. In floors constructed of precast hollow core units, fill material installed to min 1/2 in. depth flush with each surface of the floor.
      SPECIFIED TECHNOLOGIES INC — SpecSeal LCI Sealant

*Bearing the UL Classification Mark
+Bearing the UL Listing Mark

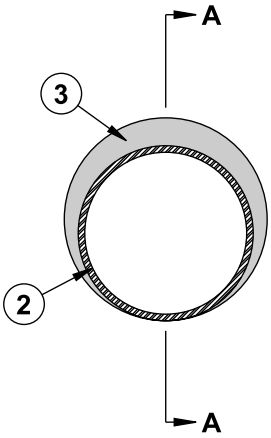

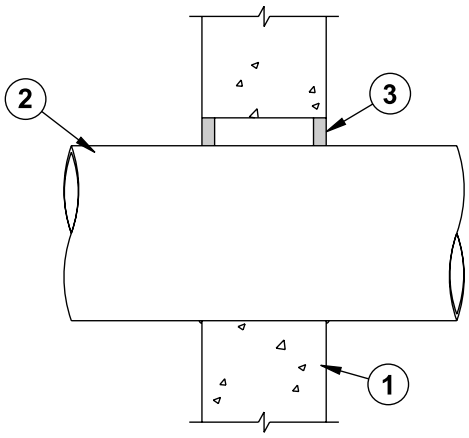

Section A-A

System No. W-J-1098
October 11, 2000
F Rating — 2 Hr
T Ratings — 1/4, 3/4 and 1 Hr (See Item 2)

1. **Wall Assembly** — Min 6 in. thick reinforced lightweight or normal weight (100-150 pcf) concrete. Wall may also be constructed of any UL Classified **Concrete Blocks*.** Max diam of opening is 2 in. larger than OD of through penetrant.
   See **Concrete Blocks** (CAZT) category in the Fire Resistance Directory for names or manufacturers.
2. **Through Penetrant** — One metallic pipe, conduit or tube to be installed eccentrically or concentrically within the firestop system. The annular space between the pipe, conduit or tube and the periphery of the opening shall be min 0 in. (point contact) to max 2 in. Pipe, conduit or tube to be rigidly supported on both sides of the wall assembly. The following types and sizes of metallic pipes, conduits and tubes may be used:
   A. **Steel Pipe** — Nom 8 in. diam (or smaller) Schedule 5 (or heavier) steel pipe.
   B. **Iron Pipe** — Nom 8 in. diam (or smaller) cast or ductile iron pipe.
   C. **Conduit** — Nom 6 in. diam (or smaller) rigid steel conduit, nom 4 in. diam (or smaller) steel electrical metallic tubing (EMT) or nom 4 in. diam (or smaller) flexible steel conduit.
   D. **Copper Pipe** — Nom 4 in. diam (or smaller) Regular (or heavier) copper pipe.
   E. **Copper Tube** — Nom 4 in. diam (or smaller) Type L (or heavier) copper tube.

Type of Penetrant	Max Diam	T Rating
Steel or iron pipe, steel conduit or EMT	2 in.	1 hr
Steel or iron pipe, steel conduit or EMT	8 in.	3/4 hr
Copper pipe or tube	4 in.	1/4 hr

2A. **Through Penetrating Product*** — **Flexible Metal Piping** — As an alternate to Item 2, one nom 1-1/4 in diam (or smaller) steel flexible metal pipe to be installed either concentrically or eccentrically within the firestop system. The annular space between the pipe and the periphery of the opening shall be min 0 in. (point contact) to max 2 in. Pipe to be rigidly supported on both sides of the wall assembly. **When flexible metal piping is used, T Rating is 1 hr.**
   OMEGA FLEX INC
   TITEFLEX CORP
   A BUNDY CO
   WARD MFG INC
3. **Fill, Void or Cavity Material*** — **Sealant** — Min 5/8 in. thickness of fill material applied within annulus, flush with both surfaces of wall assembly. At point contact location, min 1/4 in. diam bead of fill material applied at metallic pipe/concrete interface on both surfaces of wall.
   SPECIFIED TECHNOLOGIES INC — SpecSeal LCI Sealant

*Bearing the UL Classification Marking

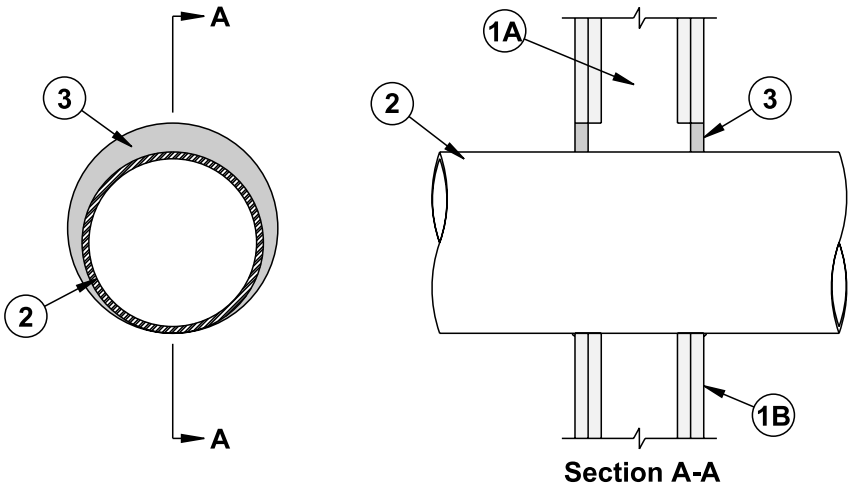

System No. W-L-1222
October 04, 2000
F Ratings — 1 and 2 Hr (See Item 1)
T Ratings — 1/4, 3/4 and 1 Hr (See Item 2)

1. **Wall Assembly** — The 1 or 2 hr fire-rated gypsum board/stud wall assembly shall be constructed of the materials and in the manner specified in the individual U300 or U400 Series Wall or Partition Design in the UL Fire Resistance Directory and shall include the following construction features:
   A. **Studs** — Wall framing may consist of either wood studs or steel channel studs. Wood studs to consist of nom 2 by 4 in. lumber spaced 16 in. OC. Steel studs to be min 3-5/8 in. wide and spaced max 24 in. OC.
   B. **Gypsum Board*** — Thickness, type, number of layers and fasteners as specified in the individual Wall and Partition Design. Max diam of opening is 10-5/8 in.

   The hourly F Rating of the firestop system is equal to the hourly fire rating of the wall assembly in which it is installed.
2. **Through Penetrant** — One metallic pipe, conduit or tube to be installed eccentrically or concentrically within the firestop system. The annular space between the pipe, conduit or tube and the periphery of the opening shall be min 0 in. (point contact) to max 2 in. Pipe, conduit or tube to be rigidly supported on both sides of the wall assembly. The following types and sizes of metallic pipes, conduits and tubes may be used:
   A. **Steel Pipe** — Nom 8 in. diam (or smaller) Schedule 5 (or heavier) steel pipe.
   B. **Iron Pipe** — Nom 8 in. diam (or smaller) cast or ductile iron pipe.
   C. **Conduit** — Nom 6 in. diam (or smaller) rigid steel conduit, nom 4 in. diam (or smaller) steel electrical metallic tubing (EMT) or nom 4 in. diam (or smaller) flexible steel conduit.
   D. **Copper Pipe** — Nom 4 in. diam (or smaller) Regular (or heavier) copper pipe.
   E. **Copper Tube** — Nom 4 in. diam (or smaller) Type L (or heavier) copper tube.

Type of Penetrant	Max Diam	T Rating
Steel or iron pipe, steel conduit or EMT	2 in.	1 hr
Steel or iron pipe, steel conduit or EMT	8 in.	3/4 hr
Copper pipe or tube	4 in.	1/4 hr

2A. **Through Penetrating Product*** — **Flexible Metal Piping** — As an alternate to Item 2, one nom 1-1/4 in. diam (or smaller) steel flexible metal pipe to be installed either concentrically or eccentrically within the firestop system. The annular space between the pipe and the periphery of the opening shall be min 0 in. (point contact) to max 2 in. Pipe to be rigidly supported on both sides of the wall assembly.

   OMEGA FLEX INC
   TITEFLEX CORP
   A BUNDY CO
   WARD MFG INC

3. **Fill, Void or Cavity Material*** — **Sealant** — Min 5/8 in. thickness of fill material applied within annulus, flush with both surfaces of wall assembly. At point contact location, min 1/4 in. diam bead of fill material applied at metallic pipe/gypsum board interface on both surfaces of wall.

   SPECIFIED TECHNOLOGIES INC — SpecSeal LCI Sealant

*Bearing the UL Classification Marking

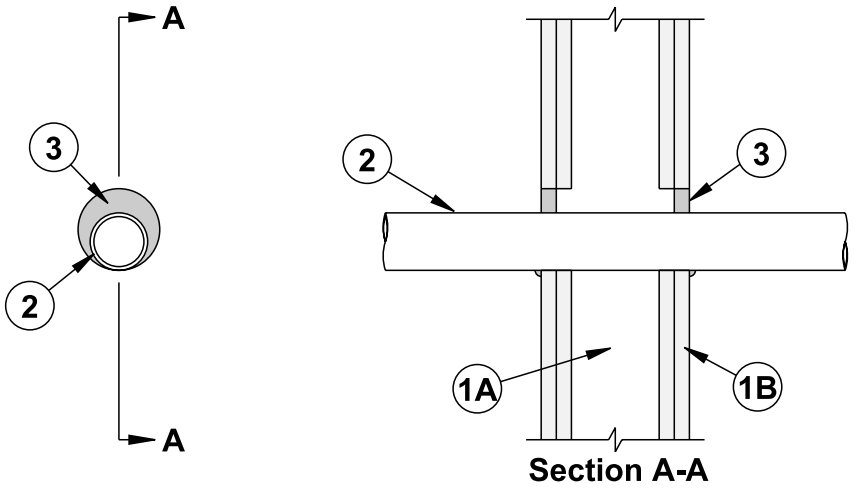

System No. W-L-2241
October 04, 2000
F Ratings — 1 and 2 Hr (See Item 1)
T Ratings — 0, 1/4, 1 and 1-3/4 Hr (See Item 2)

1. **Wall Assembly** — The 1 or 2 hr fire-rated gypsum board/stud wall assembly shall be constructed of the materials and in the manner specified in the individual U300 or U400 Series Wall or Partition Design in the UL Fire Resistance Directory and shall include the following construction features:
   A. **Studs** — Wall framing may consist of either wood studs or steel channel studs. Wood studs to consist of nom 2 by 4 in. lumber spaced 16 in. OC. Steel studs to be min 3-5/8 in. wide and spaced max 24 in. OC.
   B. **Gypsum Board*** — Thickness, type, number of layers and fasteners as specified in the individual Wall and Partition Design. Max diam of opening is 3-3/8 in.

   The hourly F Rating of the firestop system is equal to the hourly fire rating of the wall assembly in which it is installed.
2. **Through Penetrant** — One nonmetallic pipe, conduit or tube to be installed eccentrically or concentrically within the firestop system. Pipe, conduit or tube to be rigidly supported on both sides of the wall assembly. The following types and sizes of nonmetallic pipes, conduits and tubes may be used:
   A. **Polyvinyl Chloride (PVC) Pipe** — Nom 2 in. diam (or smaller) Schedule 40 solid or cellular core PVC pipe for use in closed (process or supply) or vented (drain, waste or vent) piping systems. Annular space shall be min 0 in. (point contact) to max 1 in.
   B. **Chlorinated Polyvinyl Chloride (CPVC) Pipe** — Nom 2 in. diam (or smaller) SDR17 CPVC pipe for use in closed (process or supply) or vented (drain, waste or vent) piping systems. Annular space shall be min 0 in. (point contact) to max 1 in.
   C. **Rigid Nonmetallic Conduit+** — Nom 2 in. diam (or smaller) Schedule 40 PVC conduit installed in accordance with Article 347 of the National Electrical Code (NFPA 70). Annular space shall be min 0 in. (point contact) to max 1 in.
   D. **Electrical Nonmetallic Tubing+** — Nom 2 in. diam (or smaller) PVC tubing installed in accordance with Article 331 of the National Electrical Code (NFPA 70). Annular space shall be min 0 in. (point contact) to max 1 in.
   E. **Cross Linked Polyethylene (PEX) Tubing** — Nom 1 in. diam (or smaller) SDR9 PEX tubing for use in closed (process or supply) piping systems. Annular space shall be min 0 in. (point contact) to max 1 in.
   F. **Acrylonitrile Butadiene Styrene (ABS) Pipe** — Nom 1-1/2 in. diam (or smaller) Schedule 40 solid-core or cellular core ABS pipe for use in closed (process or supply) or vented (drain, waste or vent) piping systems. Annular space shall be min 1/4 in. to max 3/4 in.

   When Item 2A or 2B is used, the T Rating is 1/4 hr. When Item 2C, 2D, or 2E is used, the T Rating is 1 hr and 1-3/4 hr for 1 hr and 2 hr fire rated walls, respectively. When Item 2F is used, T Rating is 0 hr.
3. **Fill, Void or Cavity Material*** — **Sealant** — Min 5/8 in. thickness of fill material applied within annulus, flush with both surfaces of wall assembly. At point contact location, min 1/4 in. diam bead of fill material applied at nonmetallic pipe/gypsum board interface on both surfaces of wall.

   SPECIFIED TECHNOLOGIES INC — SpecSeal LCI Sealant

*Bearing the UL Classification Marking

Specified
Technologies
Inc.

200 Evans Way, Suite 2
Somerville, N .J. 08876
Phone: (908) 526-8000
Fax: (908) 526-9623
Toll Free: (800) 992-1180

GENERAL CERTIFICATE of CONFORMANCE

Description: SpecSeal® Firestop Products

Included Products:

Series SSS Intumescent Sealant
Series LCI Intumescent Sealant
Series LC Latex Endothermic Sealant
Series SSP Intumescent Putty
Series EP Power Shield™ Box Insert
Series SSWRED Intumescent Wrap Strips
Series SSWBLU Intumescent Wrap Strips
Series SSC Intumescent Firestop Collars
Series LCC Intumescent Firestop Collars
Series SSB Intumescent Firestop Pillows
Series AS100 Elastomeric Spray
Series AS200 Elastomeric Spray
Series ES100 Elastomeric Sealant
Series SSM Firestop Mortar
Pensil Series PEN200 Silicone Foam
Pensil Series PEN300 Silicone Sealant
Pensil Series PEN300SL Silicone Sealant

These products are tested to the following standards where applicable:

ASTM STANDARD:

E 814	Fire Tests of Through-Penetration Fire Stops
E 119	Fire Tests of Building Construction and Materials
E 1966	Fire-Resistive Joint Systems
E 84	Surface Burning Characteristics of Building Materials
E 1399	Cyclic Movement and Measuring the Minimum and Maximum Joint Widths of Architectural Joint Systems

UL STANDARD

1479	Fire Tests of Through-Penetration Firestops
263	Fire Tests of Building Construction and Materials
2079	Tests for Fire-Resistance of Building Joint Systems
723	Tests for Surface Burning Characteristics of Building Materials

Chemical Content Statements:

No asbestos, PCB's or water-soluble intumescent ingredients are used or contained in these products.

February 1, 2002

James P. Stahl, Jr.
Technical Manager

Date

SpecSeal FIRESTOP PRODUCTS

SERIES LCI INTUMESCENT SEALANT

Product Data Sheet

STI

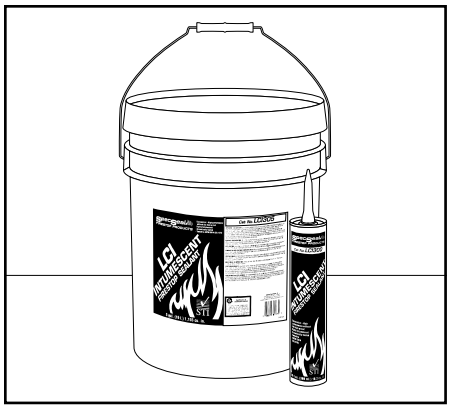

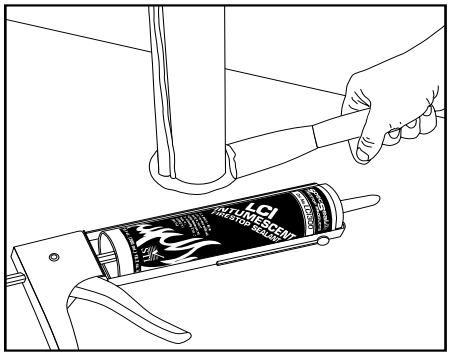

FILL, VOID OR CAVITY MATERIALS CLASSIFIED BY UNDERWRITERS LABORATORIES INC. ® FOR USE IN THROUGH-PENETRATION FIRESTOP SYSTEMS.

3L73

SEE UL FIRE RESISTANCE DIRECTORY

CLASSIFIED FILL, VOID, OR CAVITY MATERIALS FOR USE IN THROUGH-PENETRATION FIRESTOP SYSTEMS. SEE UL DIRECTORY OF PRODUCTS CERTIFIED FOR CANADA AND UL FIRE RESISTANCE DIRECTORY

FEATURES

- **Economical** High performance without the high price!
- **Highly Intumescent** Expands up to 10X.
- **Excellent Smoke Seal**
- **Safe** for contact with plastics.
- **Water Resistant** Will not re-emulsify when dry.
- **Water-Based** for easy installation, cleanup, and disposal.
- **Acoustically Tested** Reduces noise transmission
- **Safe**... Low VOC's, No Solvents, Non-Halogenated
- **Pale Red Color** for easy identification

1. PRODUCT DESCRIPTION

SpecSeal® LCI Sealant is a versatile and economical intumescent product intended for firestopping a wide array of applications in small commercial or grouped residential construction and other structures with similar applications. SpecSeal® LCI Sealant is available in a single grade that has excellent caulking properties as well as high build properties on vertical or overhead surfaces. This single grade may be caulked (standard cartridge or bulk loaded), knifed or troweled. In addition, SpecSeal® LCI does not contain PCB's or asbestos.

SpecSeal® LCI Sealant is storage stable (when stored according to the manufacturer's recommendations), is asbestos free and will not separate or shrink when dried. SpecSeal® LCI Sealant will adhere to all common construction and penetrant materials and contains no solvents that might adversely effect plastic pipes or cable jackets.

2. APPLICATIONS

See Table A for a summary application list.

SpecSeal® LCI Sealant has a broad application base designed to seal a wide variety common penetrations in light commercial and grouped residential construction. Penetrant types include insulated and non-insulated metallic pipes and tubes, non-metallic pipes and tubes, and common electrical service and power distribution, telephone, data, and TV cabling. This product is also used in conjunction with other SpecSeal® Products such as SpecSeal® Firestop Collars and Wrap Strips to protect larger plastic pipes.

3. PHYSICAL PROPERTIES

See Table B.

4. PERFORMANCE

SpecSeal® LCI Sealant is the basis for systems that meet the exacting criteria of ASTM E814 (UL1479) as well as to the time-temperature requirements of ASTM E119 (UL263). LCI provides up to a 2-hour fire rating for typical service penetrations through concrete or wood floors, concrete or masonry walls, as well as gypsum board walls. LCI meets Class A finish requirements for Flame Spread and Smoke Development when tested in accordance with ASTM E84 (UL723). LCI Sealant is also acoustically tested, demonstrating excellent sound attenuation properties.

5. SPECIFICATIONS

The firestopping sealant shall be a water-resistant, intumescent latex sealant. The sealant when exposed to high heat or flame shall exhibit a free expansion of up to 8 times its original volume. The firestopping sealant shall contain no water soluble nor hygroscopic ingredients and shall be acoustically tested. The sealant shall be UL Classified and tested to the requirements of ASTM E814 (UL1479) and shall meet Class A finish requirements when tested in accordance with ASTM E84 (UL723).

SPECIFIED DIVISIONS

DIV.	7	07840	Through-Penetration Firestopping
DIV.	13	13900	Special Construction Fire Suppression & Supervisory Systems
DIV.	15	15250	Mechanical Insulation – Fire Protection
DIV.	16	16050	Basic Electrical Materials & Methods

For the latest Product and System Information, Call STI'S FACTS-ON-DEMAND automated information attendant system by dialing toll-free (888)526-6800!

MSDS
Material Safety Data Sheet

SpecSeal® TYPE LCI SEALANT

Prepared By: James P. Stahl
Date Prepared: 10/02/00

Section One: PRODUCT INFORMATION

PRODUCT NAME:	SPECSEAL Sealant Type LCI
SHIPPING NAME:	Same
MANUFACTURER'S NAME:	Specified Technologies Inc.
MANUFACTURER'S ADDRESS:	200 Evans Way, Suite 2, Somerville, NJ 08876
BUSINESS PHONE NO.:	908-526-8000
EMERGENCY PHONE NO.:	800-255-3924

Section Two: HAZARDOUS INGREDIENTS INFORMATION

CHEMICAL NAME:	C.A.S. No.	% By Wgt.	ACGIH TLV	OSHA PEL
None above de minimis concentrations				

Section Three: PHYSICAL & CHEMICAL DATA

PHYSICAL STATE:	Paste	APPEARANCE & ODOR:	Pale red paste with minimal odor.
BOILING POINT:	212°F	SPECIFIC GRAVITY:	1.10
EVAPORATION RATE:	< 1	VAPOR PRESSURE:	N.A.
SOLUBILITY IN WATER:	Infinitely dilutable	MELTING POINT:	N.A.
PERCENT SOLIDS: (by weight)	80 %	VOLATILES : (by volume)	22%

Section Four: FIRE & EXPLOSION HAZARD DATA

FLASH POINT:	Not applicable-Water-based compound.
FLAMMABLE LIMITS:	LEL: N.A. UEL: N.A.
PROPER EXTINGUISHING METHOD:	Foam, water, or carbon dioxide.
RECOMMENDED FIRE FIGHTING PROCEDURES:	Treat as a class "B" fire. Limit fire fighting to those trained to do so. Minimize breathing gasses, vapor, fumes, or decomposition products. Use supplied-air breathing equipment for confined spaces or as otherwise needed.
UNUSUAL FIRE & EXPLOSION HAZARD:	None known.

Section Five: HEALTH HAZARD DATA

MEDICAL CONDITIONS AGGRAVATED BY EXPOSURE:	Pre-existing eye, skin, pulmonary disorders may be aggravated by this product.			
PRIMARY ROUTE OF ENTRY:	Skin	YES	Eye Contact	YES
	Inhale	NO	Ingestion	NOT LIKELY

SIGNS & SYMPTOMS OF EXPOSURE:		EMERGENCY AND FIRST AID PROCEDURES:
Skin Contact:	Can cause irritation and redness.	Wash with soap and water. Get medical attention if irritation persists.
Inhalation:	N.A.	N.A.
Ingestion:	N.A.	N.A.
Eye Contact:	Can cause irritation, redness, tearing, blurred vision.	Treat as a foreign object in eye. Flush with large amounts of water, frequently flushing under the lids. Get medical attention if irritation persists.
ACUTE EFFECTS OF OVEREXPOSURE:		Irritation and redness (eyes & skin)
CHRONIC EFFECTS:		Prolonged or repeated contact with skin can cause moderate irritation.

CARCINOGENICITY: OSHA Permissible exposure limit – NO ACGIH TLV - NO

Section Six: REACTIVITY DATA

STABILITY:	Stable
CONDITIONS TO AVOID:	Exposure to temperatures in excess of 130 F.
HAZARDOUS DECOMPOSITION PRODUCTS:	In the event of partial combustion, fumes, smoke, carbon compounds, and other decomposition products may be released.
HAZARDOUS POLYMERIZATION:	Will not occur.
INCOMPATIBILITY:	None known.

Section Seven: PRECAUTIONS FOR SAFE HANDLING & USE

RESPIRATOR:	Not needed.
GLOVES:	Cotton or rubber gloves as needed.
EYE PROTECTION:	Safety glasses with side shields if needed.
OTHER PROTECTIVE CLOTHING/ARTICLES:	None needed.
WORK/HYGIENIC PRACTICES:	Avoid prolonged or repeated contact with the skin. Product is readily removed from the skin with waterless hand cleaners followed by washing with soap and water.
STEPS TO BE TAKEN IN CASE MATERIAL IS RELEASED OR SPILLED:	Shovel or scoop into a sealable container for disposal.
WASTE DISPOSAL METHOD:	If this product becomes a waste, it is considered non-hazardous waste. Dispose of in accordance with local, state, and federal environmental and waste regulations.
STORAGE & HANDLING PROCEDURES:	Store in a cool, dry area.

Section Eight: REGULATORY INFORMATION

All components are included in the EPA Toxic Substance Control Act (TSCA) Chemical Substance Inventory. If this product becomes a waste, it does not meet the criteria of a hazardous waste as defined by RCRA 40CFR261.

Hazardous Materials Identification System (HMIS)

Health Hazard Rating:	1	No significant risk to health.
Flammability Hazard Rating:	0	Minimal hazard. Will not burn unless heated.
Reactivity Hazard Rating:	0	Normally stable and will not react with water.
Personal Protective Equipment:	A	Safety glasses.

Section Nine: DOT/SHIPPING INFORMATION

EPA SARA Title III hazard class (40CFR370):	Chronic health hazard.
EPA SARA Title III Section 313 (40CFR372):	There are no listed chemicals present in quantities greater than the de minimis level.
EPA SARA Title III (40CFR355):	There are no components in this product at a level which would require reporting.

Section Ten: DISCLAIMER

Notice: This information relates to the specific material designated and may not be valid for such material used in combination with any other materials or in any process. Such information is to the best of our knowledge and belief accurate and reliable as of the date compiled. However, no representation, warranty, or guarantee is made as to its accuracy, reliability or completeness. It is the user's responsibility to satisfy himself as to the suitability and completeness of such information for his own particular use. We do not accept liability for any loss or damage that may occur from the use of this information.

Table A: APPLICATIONS

- **Metallic Pipes** including steel, iron, or copper pipe and tubing.
- **Nonmetallic Pipes, Conduits & Tubing** including PVC, CPVC, ABS, and PEX.
- **Electrical & Electronic Cabling** including service entrance, power distribution, computer, telephone, and television.
- **Metal Ductwork** including HVAC, bath and dryer vents.
- **Insulated Pipes** including heating, cooling, and condensation applications.
- **Complete Wood Floor** firestopping package for electrical, plumbing, HVAC, telephone, and television.

Table B: PHYSICAL PROPERTIES

Product Name	Series LCI Sealant
Color	Pale Red
Odor	Mild Latex
Density	9.0 Lb/Gal
pH	9.0
VOC	0.29 Lb/Gal (35.0 g/L) ASTM D3960 OR EPA Method 24
Expansion Begins	320°F (160°C)
Volume Expansion	10X Free Expansion
In-Service Temp.	≤ 130°F (54°C)
Flame Spread	0*
Smoke Development	5*

* Tested to ASTM E84 (UL723) at 14% surface coverage (modified test for sealants and caulks)

Fig 1: METALLIC PIPES - Concrete/Masonry Floors & Walls

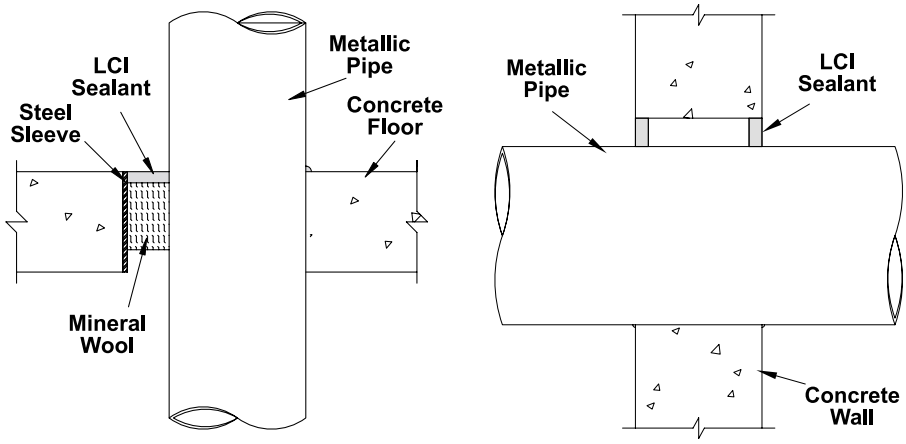

UL System No. C-AJ-1353
F Rating: 2 Hr • T Rating: 0 Hr
Steel or Iron Pipe: <8″, Copper Pipe: <4″
Annulus: Point contact to 2″
Sealant Depth: ½″
Forming Material: Nom 4 pcf mineral wool (3″ depth)

UL System No. W-J-1098
F Rating: 2 Hr • T Rating: 0 Hr
Steel or Iron Pipe: <8″, Copper Pipe: <4″
Annulus: Point contact to 2″
Sealant Depth: 5/8″

Fig 2: INSULATED METALLIC PIPES - Concrete/Masonry Floors & Walls

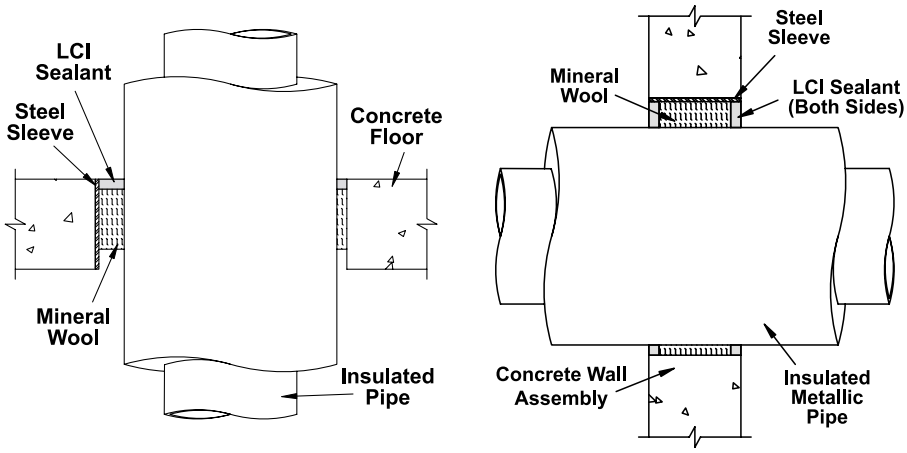

UL System No. C-AJ-5138
F Rating: 2 Hr • T Rating: ¾ or 1 Hr
Steel or Iron Pipe: 6″, Copper Pipe: 4″
Pipe Covering: Max. 2″ fiber glass or mineral wool pipe insulation.
Annulus: ½″ to 1-5/8″ • Sealant: ½″
Forming: Nom. 4 pcf mineral wool (3″ depth)

Table C: SEALANT REQUIREMENTS IN CUBIC INCHES PER 1/4 INCH OF INSTALLED DEPTH*

Pipe Size		Diameter of Opening (in.)											
Trade Size	Pipe O.D.	1.5	2.0	3.0	4.0	5.0	6.0	7.0	8.0	10	12	14	26
0.5″	0.840	0.3	0.6	1.6	3.0	4.8	6.9	9.5	12.4	19.5	28.1	38.3	132.6
1″	1.315	0.1	0.4	1.4	2.8	4.6	6.7	9.3	12.2	19.3	27.9	38.1	132.4
1.5″	1.900			1.1	2.4	4.2	6.4	8.9	11.9	18.9	27.6	37.8	132.0
2″	2.375			0.7	2.0	3.8	6.0	8.5	11.5	18.5	27.2	37.4	131.6
2.5″	2.875			0.1	1.5	3.3	5.4	8.0	10.9	18.0	26.7	36.9	131.1
3″	3.500				0.7	2.5	4.7	7.2	10.2	17.2	25.9	36.1	130.3
3.5″	4.000					1.8	3.9	6.5	9.4	16.5	25.1	35.3	129.6
4″	4.500					0.8	3.0	5.6	8.5	15.6	24.2	34.4	128.7
6″	6.625							1.1	4.0	11.1	19.7	29.9	124.2
8″	8.625									4.9	13.6	23.8	118.0
10″	10.750										5.6	15.8	110.0
12″	12.750											6.6	100.8
24″	24.000												19.6

***Different Sealant Depth?**

1/2″	*Multiply by 2*
5/8″	*Multiply by 2.5*
1″	*Multiply by 4*
1-1/4″	*Multiply by 5*

IMPORTANT NOTE: This table is for estimation purposes only. Consult UL Fire Resistance Directory or STI Product & Application Guide for specific installation requirements and limitations

Fig. 3: ELECTRICAL, DATA OR COMMUNICATIONS - Gypsum Walls

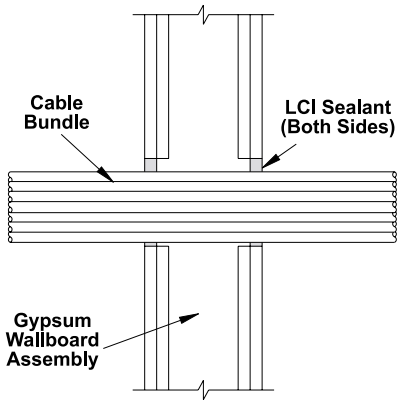

UL System No. W-L-3169
F Rating: 1, 2 Hr • T Rating: ¼ and ¾
Up to 4″ cable bundle
Annulus: 0″ to ½″ • Sealant: 5/8″

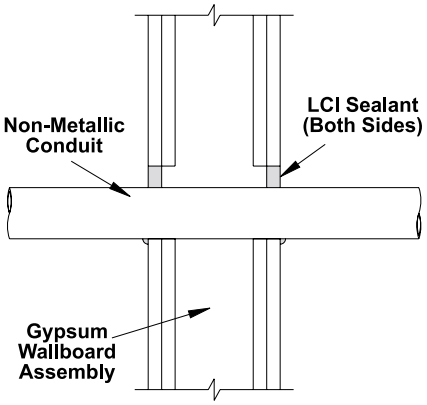

UL System No. W-L-2241
F Rating: 1, 2 Hr • T Rating: ¼, 1, 1-3/4
<2″ Rigid PVC or ENMT
Annulus: 0-1″ • Sealant 5/8″

Fig. 4: BARE & INSULATED METALLIC PIPES - Wood Floor Assemblies

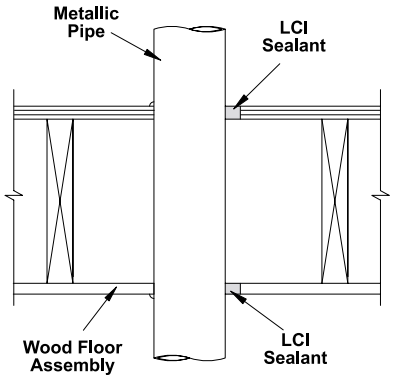

UL System No. F-C-1074
F Rating: 1 Hr • T Rating: ¼ and 1 Hr
Steel, Iron or Copper: 4″ • Chase wall optional.
Annulus: 0″ to 1″ • Sealant: 5/8″ bottom, ¾″ top

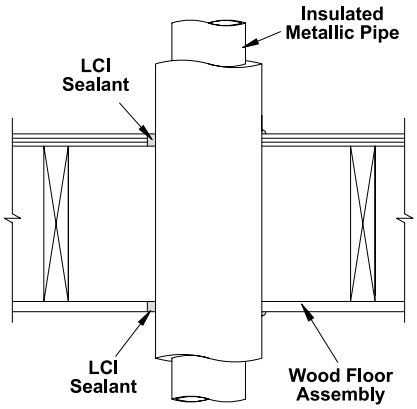

UL System No. F-C-5043
F Rating: 1 Hr • T Rating: ¾ and 1 Hr
Steel, Iron or Copper: 4″
Pipe covering: 1″ Fiber Glass, Mineral fiber or AB/PVC • Chase wall optional.
Annulus: 0″ to 1″ • Sealant: 5/8″ bottom, ¾″ top.

6. INSTALLATION INSTRUCTIONS

GENERAL: Areas to be protected must be clean and free of oil, loose dirt, rust or scale. Installation temperatures must be between 35°F (2°C) and 100°F (38°C). Allow product to dry a minimum of 24 hours before exposure to moisture.

SYSTEM SELECTION: Selection of an appropriate firestop system design is critical to the fire protection process. Space limitations preclude highly detailed information pertaining to individual application systems. Please consult the STI LC Intumescent Product & Application Guide as well as the UL® Fire Resistance Directory for additional information.

FORMING: Some installations may require forming as either an integral part of the system or as an option to facilitate installation. In systems where forming is required, mineral wool batts with a minimum nominal density of 4 PCF are generally required. Cut forming material oversize to allow for tight packing. Position forming material to allow for the proper depth of fill material.

FILL MATERIAL: SpecSeal® LCI may be installed by caulking using a standard caulking gun or from bulk containers using a bulk loading caulk gun, or by manually troweling using a mason's trowel or putty knife. If the sealant tends to pull back from a surface, clean the surface with a damp rag or sponge and reapply. Work sealant into all areas exercising care to eliminate voids or seams. The surface of the sealant can be smoothed using a putty knife dipped in water. Adding water to the sealant itself is not recommended. Sealant (when dry) may be painted using most non-solvent based paints.

Fig. 5: BARE & INSULATED METALLIC PIPES - Gypsum Walls

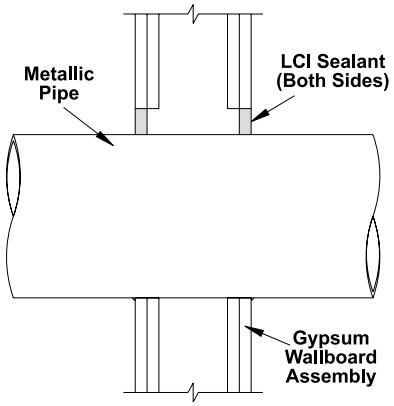

UL System No. W-L-1222
F Rating: 1, 2 Hr • T Rating: ¼, ¾, 1 Hr
Steel or Iron pipe: 8″, Copper pipe: 4″
Annulus: 0″ to 2″ • Sealant: 5/8″

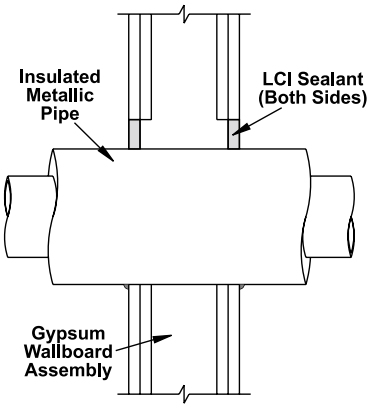

UL System Nos. W-L-5121, W-L-5122
F Rating: 1, 2 Hr • T Rating: ¼ and 1 Hr
Steel or Iron pipe: 6″, Copper pipe: 4″
Pipe covering: Max. 2″ fiber glass, ¾″ AB/PVC or 2″ mineral fiber
Annulus: 0″ to 1-1/2″ • Sealant: 5/8″

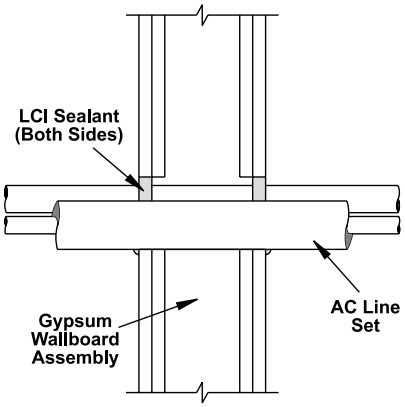

UL System No. W-L-8025
F Rating: 1, 2 Hr • T Rating: ¼ Hr
AC Line Set: Two copper tubes, one with ¾″ AB/PVC and thermostat wire
Annulus: 0″ to 1″ • Sealant 5/8″

In gypsum wallboard penetrations, apply a minimum cove bead of 1/4" at the interface of the penetrant with both exterior wall surfaces.

SMOKE SEALING: In some applications including firestop collars, SpecSeal® LCI Sealant is recommended as a smoke seal. It is suggested in these application that the sealant be applied to both sides of walls. In floor applications, a sealing bead is suggested top and bottom.

LIMITATIONS: SpecSeal LCI Sealant is water-based and cures through the evaporation of water. Low temperatures as well as high humidity may retard drying. Non-porous or impermeable backing materials, plates, or coatings may retard the drying process. Do not paint or seal in any way that prevents contact with air until sealant has dried through completely.

7. MAINTENANCE

No maintenance is normally required, however a periodic inspection of rated barriers is recommended to make sure that any new openings, modifications of previously installed firestops, or areas exhibiting physical damage, have been properly sealed or repaired. Subsequent sealing or repairs should be accomplished using SpecSeal® products per the original approved design.

RETROFIT: When adding or removing penetrants, care should be taken to minimize damage to the seal. Reseal using SpecSeal® products per the approved design. NOTE: New penetrants of a different nature than the original design may require a totally new firestop design or extensive modifications to the existing design. Reseal all openings as per the requirements of the modified design.

8. TECHNICAL SERVICE

Specified Technologies Inc. provides extensive technical support for the specification and use of its products. Technical information including Product Data and Material Safety Data Sheets, UL Classified Systems, and appropriate electronic CAD files are available both on CD and at the company's website (www.stifirestop.com). STI also provides a toll-free auto attendant fax back system (Facts-On-Demand) available 24 hours a day and seven days a week at 888-526-6800.

9. PRECAUTIONARY INFORMATION

Consult Material Safety Data Sheet for additional information on the safe handling and disposal of this material. Wash areas of skin contact with soap and water. Avoid contact with eyes. SEALANT IS CONDUCTIVE UNTIL DRY.

10. AVAILABILITY

SpecSeal® LCI Sealant is available from authorized STI distributors. Consult factory for the names and locations of the nearest sales representatives or distributors. Available packages and additional SpecSeal® Products are listed in Table D.

Table D: ORDERING INFORMATION

Cat. No.	Description
LCI300	Sealant 10.1 oz Tube 18.2 Cu In (300 ml)
LCI305	Sealant 5 Gal Pail 1,155 Cu In (19.0 Liters)

Additional SpecSeal Products...

Series SSS Sealant	The industry's most versatile sealant provides the firestopping solutions for a wide range of combustible and noncombustible applications. Water-based intumescent sealant expands up to 8X!
SSP Firestop Putty	Available both in bar form and in pads, putty provides easy retrofit for through-penetrations and economical protection for electrical boxes.
Firestop Mortar	Lightweight, versatile and economical! The best choice for large or complex installations.
Pensil® Silicones	Sealants and foam for through-penetrations and construction joints. Unexcelled aging characteristics and flexibility.
Intumescent Wrap Strips	Two grades of intumescent wrap strips provide an unmatched combination of flexibility, economy, and expansion (up to 30X). Systems for plastic pipes including FR Polypropylene up to 8" trade size!
SSC & LCC Firestop Collars	Easy to install, economical protection for ABS and PVC pipes (both solid and foam core) as well as CPVC, PVDF, and FRPP. LCC Collars are available up to 4" and SSC Collars are available up to 6" trade size.
Elastomeric Joint Seals	New economical products for sealing construction joints. Choose caulk or spray applied products tested to UL2079.

STI® Specified Technologies Inc.

200 Evans Way • Somerville, NJ 08876
Phone: (800) 992-1180 • Fax: (908) 526-9623
Facts-On-Demand: (888) 526-6800
STI on the WEB: www.stifirestop.com