FIRESTOP SUBMITTAL PACKAGE

Electrical

PROJECT:

Edit Here

SUBMITTED BY:

Edit Here

Specified Technologies Inc.

SpecSeal FIRESTOP PRODUCTS

200 Evans Way • Somerville, NJ 08876 • (800) 992-1180 • (908) 526-8000 • Fax (908) 526-9623

Electrical

Concrete Floors

SYSTEM	DESCRIPTION	PRODUCT(S)
C-AJ-1080	Max. 6 in. Steel conduit or max. 4 in. EMT. Caulk only.	SSS Sealant
C-AJ-1217	Max. 6 in. Steel conduit or max. 4 in. EMT. Optional steel sleeve.	SSS Sealant
C-AJ-2140	Max. 2 in. PVC conduit or ENMT. Optional steel sleeve.	SSS Sealant
C-AJ-3154	Electrical, telephone and data cables. Optional steel sleeve.	SSS Sealant, SSP Putty
C-AJ-8131	Multiple cables, conduits and innerducts.	SSS Sealant

Masonry Walls

SYSTEM	DESCRIPTION	PRODUCT(S)
C-AJ-8113	Mult. max. 6 in. steel conduit or EMT.	SSS Sealant
C-AJ-1080	Max. 6 in. steel conduit or 4 in. EMT. Steel sleeve. Caulk and Walk.	SSS Sealant
C-AJ-2140	Max. 2 in. PVC conduit or ENMT. Caulk and Walk.	SSS Sealant
W-J-3090	Electrical, telephone or data cables. Steel sleeve.	SSS Sealant, SSP Putty
C-AJ-8131	Multiple cables, conduits and innerducts.	SSS Sealant

Gypsum Board Walls

SYSTEM	DESCRIPTION	PRODUCT(S)
W-L-1093	Scab patch system. Mult. 2 in. steel conduit or EMT. Caulk only.	SSS Sealant
W-L-1168	Mult. max. 2 in. steel conduits or EMT. Unframed opening.	SSS Sealant
W-L-1049	Max. 6 in. steel conduit or 4 in. EMT. Caulk and Walk.	SSS Sealant
W-L-2093	Max. 2 in. PVC conduit, OFR or ENMT. Caulk and Walk.	SSS Sealant
W-L-3024	Single electrical, telephone or data cable. Caulk and Walk.	SSS Sealant, SSP Putty
W-L-3210	Electrical, telephone or data cables. Steel sleeve.	SSS Sealant, SSP Putty
CLIV	Metallic or nonmetallic electrical boxes	Putty/Putty Pads

General Certificate of Conformance

Product Data Sheets

Series SSS Intumescent Sealant
Series SSP Putty & Putty Pads

Material Safety Data Sheets

Series SSS Intumescent Sealant
Series SSP Putty & Putty Pads

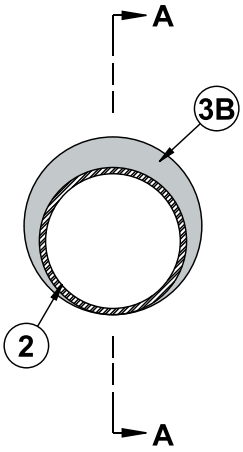

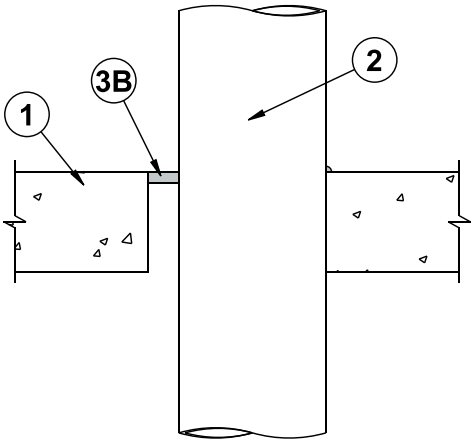

Section A-A

System No. C-AJ-1080
F Rating — 3 Hr
T Rating — 0 Hr
L Rating At Ambient — Less Than 1 CFM/sq ft
L Rating At 400 F — Less Than 1 CFM/sq ft

1. **Floor or Wall Assembly** — Min 4-1/2 in. thick reinforced lightweight or normal weight (100-150 pcf) concrete. Wall may also be constructed of any UL Classified **Concrete Blocks*.** Max diam of opening is 32 in.
   See **Concrete Block** (CAZT) category in the Fire Resistance Directory for names of manufacturers.
2. **Through Penetrants** — One metallic pipe, conduit or tubing to be centered within the firestop system. The annular space shall range from min 0 in. (point contact) to max 2 in. Pipe, conduit or tubing to be rigidly supported on both sides of floor or wall assembly. The following types and sizes of metallic pipes, conduits or tubing may be used:
   A. **Steel Pipe** — Nom 30 in. diam (or smaller) Schedule 5 (or heavier) steel pipe.
   B. **Iron Pipe** — Nom 30 in. diam (or smaller) cast or ductile iron pipe.
   C. **Conduit** — Nom 4 in. diam (or smaller) electrical metallic tubing or nom 6 in. diam (or smaller) rigid galv steel conduit.
   D. **Copper Tubing** — Nom 6 in. diam (or smaller) Type M (or heavier) copper tubing.
   E. **Copper Pipe** — Nom 6 in. diam (or smaller) Regular (or heavier) copper pipe.
3. **Firestop System** — The firestop system shall consist of the following:
   A. **Packing Material** — (Optional, Not Shown) — Mineral wool batt insulation, polyethylene backer rod or glass fiber batt insulation friction fitted into annular space. Packing material to be recessed from top surface of floor or both surfaces of wall as required to accommodate the required thickness of fill material.
   B. **Fill, Void or Cavity Material*** — **Caulk** — Min 1/2 in. thickness of fill material applied within the annulus, flush with top surface of floor or with both surfaces of wall. At point contact location, apply min 1/4 in. diam bead of sealant at the pipe/concrete interface on the top surface of the floor or both surfaces of wall.
   SPECIFIED TECHNOLOGIES INC — SpecSeal 100, 101, 102, 105, 120 or 129 Sealant

*Bearing the UL Classification Mark

Created or Revised: 03/27/03
Specified Technologies, Inc., Somerville, NJ (800) 992-1180

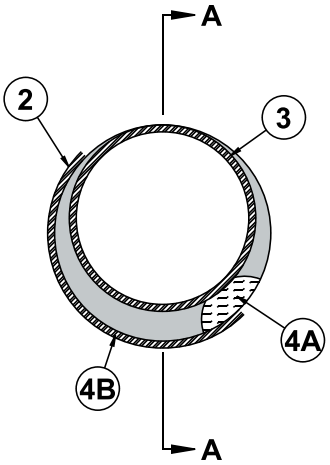

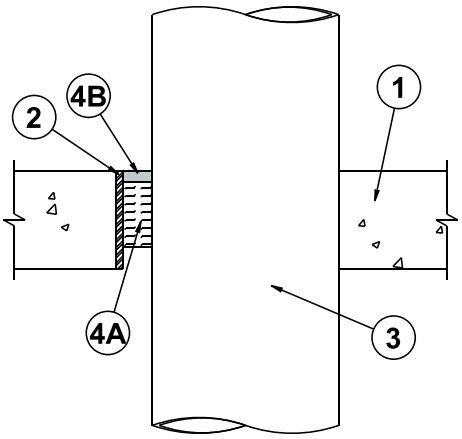

Section A-A

System No. C-AJ-1217
F Ratings — 3 and 4 Hr (See Items 4C)
T Rating — 0 Hr
L Rating At Ambient — Less Than 1 CFM/sq ft
L Rating At 400 F — Less Than 1 CFM/sq ft

1. **Floor or Wall Assembly** — Min 4-1/2 in. thick reinforced lightweight or normal weight (100-150 pcf) concrete. Max diam of opening is 32 in.
2. **Metallic Sleeve** — (Optional) — Nom 32 in. diam (or smaller) Schedule 10 (or heavier) steel sleeve cast or grouted into floor or wall assembly. Steel sleeve may be installed flush or may project a max of 3 in. beyond the floor or wall surfaces.
3. **Through Penetrant** — One metallic pipe or conduit to be installed either concentrically or eccentrically within the firestop system. The annular space between pipe or conduit and periphery of opening shall be min 0 in. (point contact) to max 2 in. Pipe or conduit to be rigidly supported on both sides of floor or wall assembly. The following types and sizes of metallic pipes or conduits may be used:
   A. **Steel Pipe** — Nom 30 in. diam (or smaller) Schedule 10 (or heavier) steel pipe.
   B. **Iron Pipe** — Nom 30 in. diam (or smaller) cast or ductile iron pipe.
   C. **Conduit** — Nom 4 in. diam (or smaller) steel electrical metallic tubing, nom 6 in. diam (or smaller) steel conduit or nom 1 in. (or smaller) flexible steel conduit.
   D. **Copper Pipe or Tubing** — Nom 6 in. diam (or smaller) Regular (or heavier) copper pipe or nom 6 in. diam (or smaller) Type M (or heavier) copper tubing.

3A. **Through Penetrating Product*** — **Flexible Metal Piping** — As an alternate to Item 3, one nom 2 in. diam (or smaller) flexible steel pipe to be installed either concentrically or eccentrically within the firestop system. The annular space between the pipe and the periphery of the opening shall be min 0 in. (point contact) to max 2 in. Pipe to be rigidly supported on both sides of floor or wall assembly.
   OMEGA FLEX INC
   TITEFLEX CORP
   A BUNDY CO
   WARD MFG INC

4. **Firestop System** — The Firestop system shall consist of the following:
   A. **Packing Material** — Min 3 in. thickness of min 4 pcf mineral wool batt insulation firmly packed into opening as a permanent form. In floors, packing material to be recessed from top surface of floor or from top edge of steel sleeve as required to accommodate the required thickness of fill material. In walls, packing material to be recessed from both surfaces of wall or from both ends of steel sleeve as required to accommodate the required thickness of fill material.
   B. **Fill, Void or Cavity Material*** — **Sealant** — Min 1/2 in. thickness of fill material applied within the annulus. In floors, fill material to be applied flush with top surface of floor or top edge of steel sleeve. In walls, fill material to be applied flush with both surfaces of wall or both ends of steel sleeve. At the point contact location between pipe and concrete, a min 3/8 in. diam bead of fill material shall be applied at the concrete/pipe interface on the top surface of floor and on both surfaces of wall.
      SPECIFIED TECHNOLOGIES INC — SpecSeal 100, 101, 102, 105, 120 or 129 Sealant
   C. **Steel Cover Plate** — (Not Shown) — Min 0.014 in. (No. 28 gauge) galv steel cut to fit the contour of the through-penetrant (Item 3) with a min 2 in. lap on the top surface of floor and both surfaces of wall assembly around the perimeter of the through-opening. Seams of steel cover plate shall overlap a min 1/2 in. Steel cover plate secured to top surface of floor and both surfaces of wall assembly by means of 1/4 in. diam by 1-3/4 in. long steel concrete anchors in conjunction with 1/4 in. by 1-1/4 in diam steel fender washers spaced a max 6 in. OC.

   The hourly F Rating of the firestop system is dependent upon the use of the steel cover plate. If the steel cover plate is used, the F Rating of the firestop system is 4 hr. If the steel cover plate is omitted, the F Rating of the firestop system is 3 hr .

*Bearing the UL Classification Mark

Created or Revised: 03/27/03
Specified Technologies, Inc., Somerville, NJ (800) 992-1180

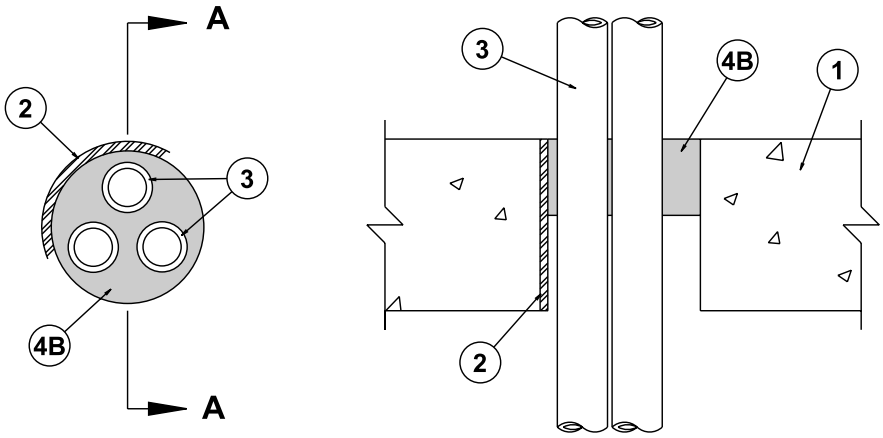

Section A-A

System No. C-AJ-2140
September 26, 2000
F Rating — 2 Hr
T Ratings — 0, 1, 1-1/2 and 2 Hr (See Item 4B)
L Rating At Ambient — Less Than 1 CFM/sq ft
L Rating At 400 F — Less Than 1 CFM/sq ft

1. **Floor or Wall Assembly** — Min 4-1/2 in. thick reinforced lightweight or normal weight (100-150 pcf) concrete floor or min 5 in. thick reinforced lightweight or normal weight concrete wall. Floor may also be constructed of any min 6 in. thick UL Classified **Precast Concrete Units*.** Wall may also be constructed of any UL Classified **Concrete Blocks*.** Max diam of opening is 4 in.

   See **Concrete Block** (CAZT) and **Precast Concrete Units** (CFTV) categories in the Fire Resistance Directory for names of manufacturers.
2. **Metallic Sleeve** — (Optional) — Nom 4 in. diam (or smaller) Schedule 10 (or heavier) steel pipe cast or grouted into floor or wall, flush with floor or wall surfaces.
3. **Through Penetrants** — One or more pipes, conduits or tubing to be installed within the opening. The annular space between pipes, conduits or tubing and the periphery of the opening shall be a min of 1/4 in. to a max 13/16 in. The annular space between the pipes, conduits or tubing shall be a nom 1/4 in. Pipes, conduits or tubing to be rigidly supported on both sides of floor or wall assembly. The following types and sizes of nonmetallic pipes, conduits or tubing may be used:
   A. **Polyvinyl Chloride (PVC) Pipe** — Nom 2 in. diam (or smaller) Schedule 40 cellular or solid core PVC pipe for use in closed (process or supply) or vented (drain, waste or vent) piping systems.
   B. **Rigid Nonmetallic Conduit (RNC)+** — Nom 2 in. diam (or smaller) Schedule 40 PVC conduit installed in accordance with Article 347 of the National Electrical Code (NFPA No. 70).
   C. **Chlorinated Polyvinyl Chloride (CPVC) Pipe** — Nom 2 in. diam (or smaller) SDR17 CPVC pipe for use in closed (process or supply) systems.
   D. **Electrical Nonmetallic Tubing (ENT)+** — Nom 2 in. diam (or smaller) PVC tubing installed in accordance with Article 331 of the National Electrical Code (NFPA No. 70).
   E. **Optical Fiber Raceway (OFR)+** — Nom 1 in. diam (or smaller) optical fiber raceway formed from either polyvinylidene fluoride (PVDF) or polyvinyl chloride (PVC). Raceway to be installed in accordance with Article No. 770 of the National Electrical Code (NFPA No. 70). Multiple 62.5/48 micron fiber optical cables with PE or PVC jacket to be installed within each raceway.

      See **Optical Fiber Raceway** (QAZM) category in the Electrical Construction Materials Directory for names of manufacturers.
   F. **Cross Linked Polyethylene (PEX) Tubing** — Nom 1 in. diam (or smaller) SDR 9 PEX tubing for use in closed (process or supply) piping systems.
4. **Firestop System** — The firestop system shall consist of the following:
   A. **Packing Material** — (Not Shown, Optional) — Polyethylene backer rod, mineral wool batt insulation or fiberglass batt insulation friction fitted into annular space. Packing material to be recessed from top surface of floor or both surfaces of wall as required to accommodate the required thickness of fill material.
   B. **Fill, Void or Cavity Material*** — **Sealant** — Fill material applied within the annulus, flush with top surface of concrete floor or with both surfaces of wall. When floor is constructed of hollow-core precast concrete units, fill material to be installed symmetrically on both sides of floor, flush with floor surfaces. The T Rating of the firestop system is dependent upon the type and max diam of through penetrant, the absence or presence of a steel sleeve and the min thickness of the fill material, as tabulated below:

(System No. C-AJ-2140 Continued)

(System No. C-AJ-2140 Continued)

Type Of Penetrant	Max Diam of Penetrant In.	Steel Sleeve	Piping System	Min Fill Mat'l Thkns In.	T Rating Hr
PVC, CPVC Pipe	2	Yes	Vented	2++	0
PVC, CPVC Pipe	2	No	Vented	2++	1
PVC, CPVC Pipe	2	Yes	Closed	2++	1
PVC, CPVC Pipe	2	No	Closed	2++	2
RNC	1	Yes	—	2	1
RNC	1	No	—	2	2
ENT	1	Yes	—	2	1
ENT	1	No	—	2	2
ENT	2	No	—	1	1-1/2
OFR	1	Yes	—	2	1
OFR	1	No	—	2	2
OFR	1	No	—	1-1/2	0
PEX Tubing	1	Yes	Closed	2	1
PEX Tubing	1	No	Closed	2	2
PEX Tubing	1	No	Closed	1+++	2

++-When vented PVC or CPVC pipes are used in hollow-core precast concrete floor, the fill material thickness installed at both the top and bottom surfaces of the floor may be reduced to 1 in.

+++-When min 1 in. depth of fill material is used, a min 1 in depth of tightly-packed mineral wool batt packing material is required to be used as a form within the annular space.

SPECIFIED TECHNOLOGIES INC — SpecSeal 100, 101, 102 or 105 Sealant

+Bearing the UL Listing Mark

*Bearing the UL Classification Marking

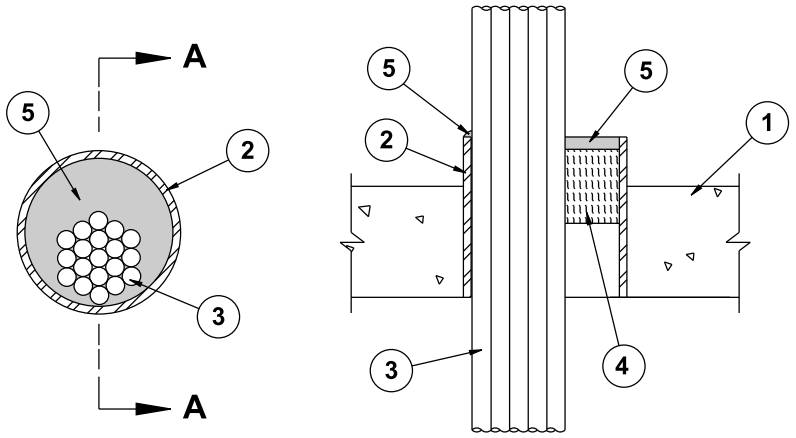

Section A-A

System No. C-AJ-3154

F Ratings — 2, 3 and 4 Hr (See Item 5)
T Ratings — 0, 1/2 and 2-3/4 Hr (See Item 5)

1. **Floor or Wall Assembly** — Min 2-1/2 in. or 4-1/2 in. thick reinforced lightweight or normal weight (100-150 pcf) concrete. Wall may also be constructed of any UL Classified **Concrete blocks*.** Floor may also be constructed of any UL Classified hollow-core **Precast Concrete Units***. Max diam of opening is 6 in.
   See **Concrete Blocks** (CAZT) and **Precast Concrete Units** (CFTV) categories in the Fire Resistance Directory for names of manufacturers.
2. **Sleeve** — Nom 6 in. diam (or smaller) Schedule 10 (or heavier) steel pipe sleeve or nom 6 in. diam (or smaller) Schedule 40 polyvinyl chloride (PVC) pipe sleeve cast or grouted into floor or wall flush with floor or wall surfaces. Steel sleeve may be installed to project a max of 2 in. beyond the floor or wall surfaces.
3. **Cables** — Aggregate cross-sectional area of cables in sleeve to be max 45 percent of the cross-sectional area of the sleeve. See Item 5 for specific cable fill requirements. Tight bundle of cables to be installed in the steel sleeve. The annular space within the firestop system shall be a min of 0 in. (point contact) to a max of 2 in. In 4 hr fire rated assemblies, the annular space within the firestop system shall be a min of 1/4 in. to a max of 1 in. Cables to be rigidly supported on both sides of the floor or wall assembly. Any combination of the following types and sizes of cables may be used:
   A. Max 400 pair No. 24 AWG (or smaller) copper conductor cable with polyvinyl chloride (PVC) jacketing and insulation.
   B. Max 3/C No. 2/0 AWG (or smaller) aluminum or copper conductor service entrance cable with PVC insulation and jacket.
   C. Max 3/C No. 2/0 AWG (or smaller) copper conductor PVC jacketed aluminum clad or steel clad TECK 90 cable.
   D. Max 3/C No. 8 AWG (or smaller) nonmetallic sheathed (Romex) cable with copper conductors, PVC insulation and jacket.
   E. Max 1/C 1000 kcmil (or smaller) copper conductor power cable with XLPE or PVC insulation and XLPE or PVC jacket.
   F. Max RG59/U (or smaller) coaxial cable with fluorinated ethylene insulation and jacketing.
   G. Max 62.5/48 fiber optic cable with PVC insulation and jacketing.
   H. Max 4 pair No. 24 AWG (or smaller) copper conductor data cable with PVC insulation and jacket.

3A. **Through Penetrating Product*** — (Not Shown) — Max 4/C No. 2/0 AWG (or smaller) steel or aluminum **Armored Cable+ or Metal Clad Cable+** with copper or aluminum conductors. Diam of cable bundle (Item 3) including armored cable not to exceed 4 in. Through penetrating product to be rigidly supported on both sides of a floor or wall assembly.
   AFC CABLE SYSTEMS INC

4. **Packing Material** — Min 2, 3 or 4 in. thickness of min 4 pcf density mineral-wool batt insulation tightly packed into opening as a permanent form for 2, 3 or 4 hr fire rated assemblies, respectively. Packing material to be recessed from top edge of sleeve or from top surface of concrete in cast concrete floor assemblies to accommodate the required thickness of fill material. Packing material to be recessed from both edges of sleeve or from both surfaces of assembly in walls and in floor constructed with hollow-core precast concrete units to accommodate the required thickness of fill material.
5. **Fill, Void or Cavity Material*** — **Sealant or Putty** — Min 1/2 in. thickness of fill material applied within the annulus for 2 and 3 hr F Ratings. Min 3/4 in. thickness of fill material applied with the annulus for 4 hr F Rating. In floors, fill material to be installed flush with top edge of sleeve or top surface of floor. In walls and in floor constructed of hollow-core precast concrete units, fill material to be installed flush with both ends of sleeve or both surfaces of assembly.
   F and T Ratings of firestop system are dependent upon the through opening size, thickness of concrete, sleeve type and percent cable fill, as shown in the following table:

Max Opening Diam	Min Concrete Thickness	Optional Sleeve Type	Cable Type	Percent Cable Fill	F Rating	T Rating
6 in.	2-1/2 in.	PVC	A to H, 3A	37	2 hr	0 hr
6 in.	2-1/2 in.	PVC	H	45	2 hr	0 hr
6 in.	2-1/2 in.	Steel	A to H, 3A	37	2 hr	0 hr
6 in.	2-1/2 in.	Steel	H	45	2 hr	0 hr
6 in.	4-1/2 in.	Steel	A to H, 3A	34	3 hr	1/2 hr
6 in.	4-1/2 in.	Steel	H	45	3 hr	1/2 hr
2 in.	4-1/2 in.	Steel	H	40	3 hr	2-3/4 hr
2 in.	4-1/2 in.	Steel	H	40	4 hr	2-3/4 hr

   SPECIFIED TECHNOLOGIES INC — SpecSeal 100, 101, 102, 105, 120 or 129 Sealant. When min floor or wall thickness is 4-1/2 in., SpecSeal Putty may be used.

*Bearing the UL Classification Mark

Created or Revised: 01/28/03
Specified Technologies, Inc., Somerville, NJ (800) 992-1180

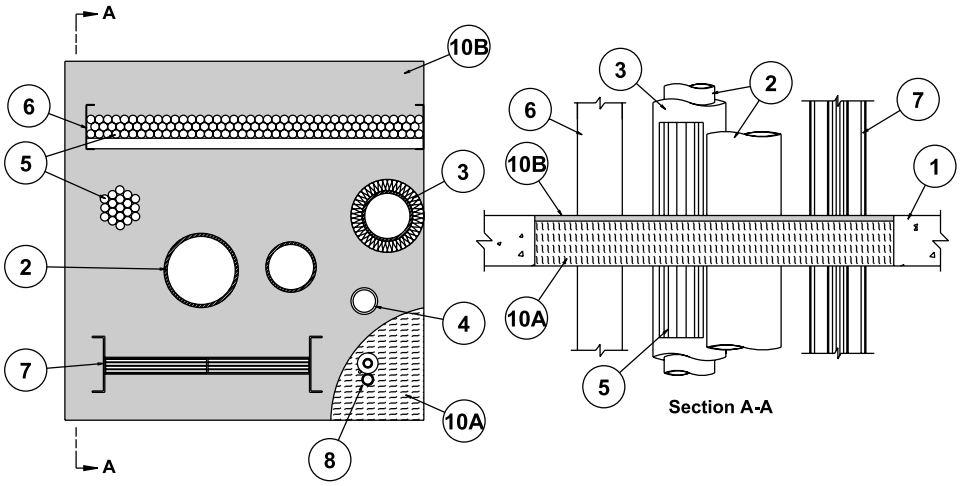

System No. C-AJ-8113
November 30, 2001
F Rating — 2 Hr
T Ratings — 0, 1/4, 1/2, 3/4 and 2 Hr (See Items 2 through 9)

1. **Floor or Wall Assembly** — Min 4-1/2 in. thick reinforced lightweight or normal weight (100-150 pcf) concrete. Wall may also be constructed of any UL Classified **Concrete Blocks***. Max area of opening is 1024 sq in. with a max width or height of 32 in.
   See **Concrete Blocks** (CAZT) category in the Fire Resistance Directory for names of manufacturers.
2. **Metallic Penetrants** — One or more metallic pipes, conduits or tubes to be installed within the opening. Annulus between penetrants is min 0 in. (point contact) to max 5 in. Annulus between penetrants and periphery of opening is 0 in. (point contact) to max 6 in. Penetrants rigidly supported on both sides of floor or wall assembly. The following types and sizes of metallic pipes, conduits or tubing may be used:
   A. **Steel Pipe** — Nom 12 in. diam (or smaller) Schedule 10 (or heavier) steel pipe.
   B. **Iron Pipe** — Nom 12 in. diam (or smaller) cast or ductile iron pipe.
   C. **Conduit** — Nom 6 in. diam (or smaller) rigid steel conduit, nom 4 in. diam (or smaller) electrical metallic tubing (EMT), or nom 4 in. diam (or smaller) steel **Flexible Metal Conduit#**.
   D. **Copper Pipe or Tube** — Nom 6 in. diam (or smaller) Regular (or heavier) copper pipe or Type M (or heavier) copper tube.

Type of Metallic Penetrant	Max Diam of Through Penetrant, in.	T Rating, Hr
Steel or Iron Pipe, Conduit	12	0
Copper Pipe or Tube	6	0
Steel or Iron Pipe, Conduit or EMT	4	1/4
Steel or Iron Pipe, Conduit or EMT	2	1/2
Steel or Iron Pipe, Conduit or EMT	1	3/4

3. **Pipe Insulation** — (Optional) — The following types of pipe insulations may be installed on one or more of the max 4 in. diam metallic pipes or tubes:
   A. **Pipe and Equipment Covering Materials*** — Nom 1 in. thick hollow cylindrical heavy density (min 3.5 pcf) glass fiber units jacketed on the outside with an all service jacket. Longitudinal joints sealed with metal fasteners or factory-applied self-sealing lap tape. Transverse joints secured with metal fasteners or with butt tape supplied with the product. **When Item 3A is used, T Rating is 3/4 Hr.**
      See **Pipe and Equipment Covering Materials** (BRGU) category in the Building Materials Directory for names of manufacturers. Any pipe covering meeting the above specifications and bearing the UL Classification Marking with a Flame Spread Index of 25 or less and a Smoke Developed Index of 50 or less may be used.
   B. **Pipe Covering Materials*** — Nom 2 in. thick unfaced mineral fiber pipe insulation having a nom density of 3.5 pcf (or heavier) and sized to the outside diam of the pipe or tube. Pipe insulation secured with min 8 AWG steel wire spaced max 12 in. OC. **When Item 3B is used, T Rating is 2 Hr.**
      OWENS CORNING HT INC DIV OF OWENS CORNING — High Temperature Pipe Insulation 1200, High Temperature Pipe Insulation BWT and High Temperature Pipe Insulation Thermaloc
   C. **Sheathing Material*** — Use in conjunction with Item 3B. Foil-scrim-kraft or all service jacket material shall be wrapped around the outer circumference of the pipe insulation (Item 3B) with the kraft side exposed. Longitudinal and transverse joints sealed with metal fasteners or butt tape.
      See **Sheathing Materials** (BVDV) category in the Building Materials Directory for names of manufacturers. Any sheathing material meeting the above specifications and bearing the UL Classification Marking with a Flame Spread Index of 25 or less and a Smoke Developed Index of 50 or less may be used.
   D. **Tube Insulation** — **Plastics##** — Nom 3/4 in. thick acrylonitrile butadiene/polyvinyl chloride (AB/PVC) flexible foam furnished in the form of tubing. **When Item 3D is used, T Rating is 1/2 Hr.**
      See **Plastics** (QMFZ2) category in the Plastics Recognized Component Directory for names of manufacturers. Any Recognized Component tube insulation meeting the above specifications and having a UL 94 Flammability Classification of 94-5VA may be used.

(System No. C-AJ-8113 Continued)

E. **Pipe Covering Materials*** — **Cellular Glass Insulation** — Nom 2 to 3 in. thick cellular glass units sized to the outside diam of the pipe or tube and supplied in nom 24 in. long half sections or nom 18 in. long segments. Pipe insulation installed on pipe in accordance with the manufacturer's instructions. **When Item 3E is used, T Rating is 2 Hr.**
Pittsburgh Corning Corp. — FOAMGLAS

F. **Metal Jacket** — Used in conjunction with Item 3E. Min 12 in. long jacket formed from min 0.010 in. thick aluminum sheet cut to wrap tightly around the pipe insulation with a min 2 in. lap and secured using bands and seals of a similar material or min No. 18 AWG steel tie wire. Bands or steel tie wire to be located within 2 in. of each end of the jacket and spaced max 10 in. OC. Jacket installed with edge abutting surface of fill material (Item 9A) on top surface of floor or both surfaces of wall. Metal jacket to be used in addition to any other jacketing material which may be required on the pipe covering.

G. **Pipe and Equipment Covering Materials*** — Nom 2 to 3 in. thick hollow cylindrical calcium silicate (min 14 pcf) units sized to the outside diam of the pipe or tube. Pipe insulation secured with stainless steel bands or min 8 AWG stainless steel wire spaced max 12 in. OC. **When Item 3G is used, T Rating is 2 Hr.**

4. **Nonmetallic Penetrants** — One or more nonmetallic pipes, conduits or tubes to be installed within the opening. Annulus between penetrants and periphery of opening is min 1 in. to max 6 in. Separation between metallic and nonmetallic penetrants is min 6 in. Penetrants rigidly supported on both sides of floor or wall assembly. The following types and sizes of nonmetallic pipes, conduits or tubing may be used.

A. **Polyvinyl Chloride (PVC) Pipe** — Nom 2 in. diam (or smaller) solid or cellular core Schedule 40 PVC pipe for use in closed (process or supply) piping systems.

B. **Chlorinated Polyvinyl Chloride (CPVC) Pipe** — Nom 2 in. diam (or smaller) SDR17 CPVC pipe for use in closed (process or supply) piping systems.

C. **Rigid Nonmetallic Conduit+** — Nom 2 in. diam (or smaller) Schedule 40 PVC conduit installed in accordance with Article 347 of the National Electrical Code (NFPA 70).

D. **Electrical Nonmetallic Tubing (ENT)+** — Nom 2 in. diam (or smaller) corrugated wall ENT formed of polyvinyl chloride (PVC) installed in accordance with Article 331 of the National Electrical Code (NFPA 70).

When Item 4 is used, the T Rating of the firestop system is 2 hr.

5. **Cables** — Nom 4 in. diam (or smaller) tight bundle of cables. Annulus between cable bundle and periphery of opening is min 0 in. (point contact) to max 6 in. Separation between cable bundle and metallic or nonmetallic penetrants shall be min 6 in. Cable bundle rigidly supported on both sides of floor or wall assembly. The following types and sizes of cables may be used:

A. Max 1/C — 1000 kcmil cable with polyvinyl chloride (PVC) or cross-linked polyethylene (XLPE) insulation and jacket.

B. Max 7/C — No. 12 AWG cable with PVC-nylon insulation and PVC jacket.

C. Max 400 pair — No. 24 AWG copper conductor telephone cable with PVC insulation and jacket.

D. Max RG/U coaxial cables with fluorinated ethylene jacket and insulation.

E. Multiple fiber optic cables with PVC insulation.

F. **Through Penetrating Products*** — Max 4/C with ground No. 2/O AWG Metal-Clad Cable+.
AFC Cable Systems Inc.

When cables are used, T Rating is 1/2 hr.

6. **Cable Tray** — Max 30 in. wide by max 6 in. deep open ladder cable tray with channel-shaped side rails formed from min 0.060 in. thick (No. 16 MSG) galv steel or min 0.060 in. thick aluminum with rungs spaced max 9 in. OC. A max of two cable trays may be installed within the opening with a min separation of 8 in. between trays. Annulus between the cable tray and the periphery of the opening is min 0 in. (point contact) to max 6 in. Separation between cable tray and metallic or nonmetallic penetrants is min 6 in. Cable trays to be rigidly supported on both sides of the floor or wall assembly. Aggregate cross-sectional area of cables in cable tray not to exceed 40 percent of the cross-sectional area of the cable tray based on a max 3 in. cable loading depth within tray. Any combination of the cable types specified in Item 5 may be used. **When cable tray is used, T Rating is 1/2 hr.**

7. **Busway+** — Nom 19 in. wide (or smaller) by 5 in. deep "I" shaped aluminum enclosure containing factory-mounted copper bars rated for 600 V, 5000 A or aluminum bars rated for 600 V, 4000 A. A max of two busways may be installed within the opening. The annular space between the busway and the periphery of the opening shall be a min 0 in. (point contact) to a max 5 in. Busways spaced min 6 in. from all other penetrants. Busway to be rigidly supported on both sides of floor or wall assembly. The busway shall bear the UL Listing Mark and shall be installed in accordance with all provisions of Article 364 of the National Electrical Code, NFPA 70. **When busway is used, the T Rating is 1/4 hr.**

8. **Air Conditioning (AC) Line Set** — One or more AC line sets installed within opening. Each AC line set consists of two pipes or tubes (Item 8A), tubing insulation (Item 8B) and a thermostat cable (Item 8C). The space between the AC line sets shall be min 2 in. The space between the AC line sets and the periphery of the opening shall be min 0 in. (point contact) to max 6 in. The AC line sets shall be spaced min 6 in. from uninsulated metallic penetrants and shall be rigidly supported on both sides of the floor or wall assembly.

8A. **Through Penetrant** — A max of two pipes or tubes to be installed in each AC line set. Of the two pipes or tubes, only one may have a nom diam greater than 1/2 in. The following types and sizes of through penetrants may be used:

A. **Steel Pipe** — Nom 1 in. diam (or smaller) Schedule 5 (or heavier) steel pipe.

B. **Iron Pipe** — Nom 1 in. diam (or smaller) cast or ductile iron pipe.

C. **Copper Pipe** — Nom 1 in. diam (or smaller) Regular (or heavier) copper pipe.

D. **Copper Tube** — Nom 1 in. diam (or smaller) Type L (or heavier) copper tube.

8B. **Tube Insulation** — **Plastics#** — Nom 3/4 in. thick acrylonitrile butadiene/polyvinyl chloride (AB/PVC) flexible foam furnished in the form of tubing. The tube insulation may be installed on one max 1/2 in. diam pipe or tube in each AC line set. The space between the insulated and uninsulated pipes or tubes within each AC line set shall be 0 in. (point contact).

See **Plastics** (QMFZ2) category in the Plastics Recognized Component Directory for names of manufacturers. Any Recognized Component tube insulation meeting the above specifications and having a UL 94 Flammability Classification of 945VA may be used.

8C. **Cable** — One 4 pair No. 18 AWG (or smaller) thermostat cable with polyvinyl chloride (PVC) insulation and jacket materials may be installed with each AC line set.
When Item 8 is used, the T Rating of the firestop system is 1/4 hr.

9. **Steel Duct** — (Not Shown) — Nom 4 in. diameter (or smaller) No. 28 GA (or heavier) steel duct installed within opening when opening contains no cables or cable tray. A max of two steel ducts may be installed within the through-opening. Ducts to be spaced min 4 in. apart and min 8 in. from insulated penetrants and nonmetallic penetrants. Annulus between the steel duct and the periphery of the opening shall be min 0 in. (point contact) to max 6 in. Steel ducts to be rigidly supported on both sides of floor or wall assembly. **When steel duct is used, the T Rating is 0 hr.**

10. **Firestop System** — The firestop system shall consist of the following items:
    A. **Packing Material** — Min 4 in. thickness of min 4 pcf mineral wool batt insulation tightly packed into opening. Packing material recessed from top surface of floor assembly or from both surfaces of wall or precast concrete units.
    B. **Fill, Void or Cavity Materials*** — **Sealant** — Min 1/2 in. depth of fill material applied within the annulus, flush with top surface of floor assembly or with both surfaces of the wall assembly. Additional fill material forced into interstices of grouped cables and grouped cables within cable trays. At point contact location between through penetrant and concrete, a min 3/8 in. diam of fill material shall be applied at through penetrant/concrete interface on top surface of floor or both surfaces of the wall.
    Specified Technologies Inc. — SpecSeal 100, 101, 102, 105, 120 or 129 Sealant

* Bearing the UL Classification Marking
#Bearing the UL Recognized Components Mark
+Bearing the UL Listing Mark

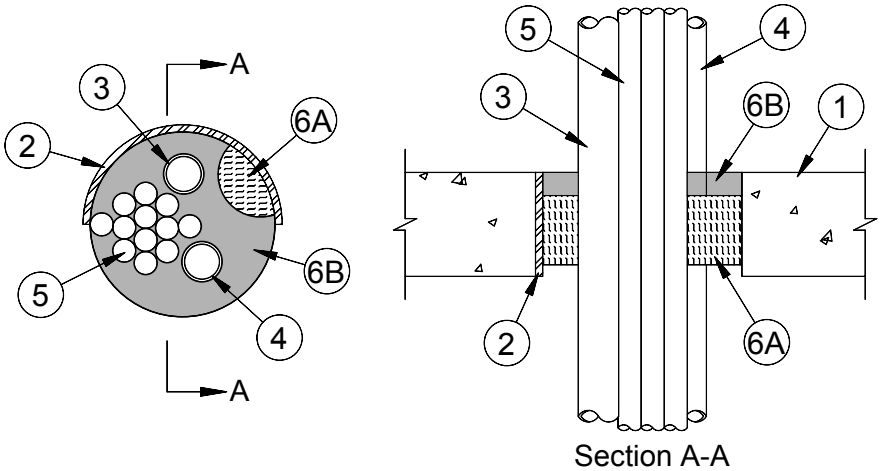

System No. C-AJ-8131
F Rating — 2 Hr
T Ratings — 1/4, 1/2, 3/4 and 2 Hr (See Items 2, 3, 4 and 5)

1. **Floor or Wall Assembly** — Min 4-1/2 in. thick reinforced lightweight or normal weight (100-150 pcf) concrete floor or wall assembly. Floor may also be constructed of any min 6 in. thick hollow core UL Classified **Precast Concrete Units*.** Wall may also be constructed of any UL Classified **Concrete Blocks*.** Max diam of opening is 8 in.
   See **Concrete Blocks** (CAZT) or **Precast Concrete Units** (CFTV) categories in the Fire Resistance Directory for names of manufacturers.
2. **Steel Sleeve** — (Optional) — Nom 8 in. diam (or smaller) Schedule 10 (or heavier) steel pipe sleeve cast or grouted into concrete flush with or extending max 2 in. beyond floor or wall surfaces. When steel sleeve is used, max T Rating is 1/2 hr.
3. **Metallic Penetrants** — One or more metallic pipes, conduits or tubing installed concentrically or eccentrically within the opening. Annular space between metallic penetrants and periphery of opening to be min 0 in. (point contact) to max 2 in. Annular space between metallic penetrants and nonmetallic penetrants or cables to be min 1/2 in. Metallic pipes, conduits or tubing to be rigidly supported on both sides of floor or wall assembly. Any combination of the following types and sizes of metallic pipes, conduits or tubing may be installed within the opening:
   A. **Steel Pipe** — Nom 2 in. diam (or smaller) Schedule 5 (or heavier) steel pipe.
   B. **Iron Pipe** — Nom 2 in. diam (or smaller) cast or ductile iron pipe.
   C. **Conduit** — Nom 2 in. diam (or smaller) rigid steel conduits, electrical metallic tubing (EMT) or flexible steel conduit.
   The max T Rating is 3/4 hr when Item 3 is used.
4. **Nonmetallic Penetrants** — One or more nonmetallic pipes, conduits or tubing installed concentrically or eccentrically within the opening. Annular space between nonmetallic penetrants and metallic penetrants or cables to be min 1/2 in. to max 1-1/2 in. Annular space between nonmetallic penetrants and periphery of opening to be min 1/2 in. to max 2 in. Nonmetallic pipes, conduits or tubing to be rigidly supported on both sides of floor or wall assembly. Any combination of the following types and sizes of nonmetallic pipes, conduits or tubing may be installed within the opening:
   A. **Polyvinyl Chloride (PVC) Pipe** — Nom 2 in. diam (or smaller) Schedule 40 PVC pipe for use in closed (process or supply) piping systems.
   B. **Chlorinate Polyvinyl Chloride (CPVC) Pipe** — Nom 2 in. diam (or smaller) SDR11 CPVC pipe for use in closed (process or supply) piping systems.
   C. **Rigid Nonmetallic Conduit (RNC)+** — Nom 2 in. diam (or smaller) Schedule 40 PVC conduit installed in accordance with Article 347 of the National Electrical Code (NFPA 70).
   D. **Electrical Nonmetallic Tubing (ENT)+** — Nom 2 in. diam (or smaller) ENT formed from PVC installed in accordance with Article 331 of the National Electrical Code (NFPA 70).
   E. **Optical Fiber Raceway (OFR)+** — Nom 2 in. diam (or smaller) optical fiber raceway ("innerduct") formed from either PVC or polyvinylidene fluoride (PVDF) installed in accordance with Article 770 of the National Electrical Code (NFPA 70).
   The max T Rating is 2 hr when Item 4 is used.
5. **Cables** — Nom 4 in. diam (or smaller) tight bundle of cables. Cable bundle spaced min 1/2 in. from metallic and nonmetallic penetrants. Cable bundle spaced 0 in. (point contact) to 2 in. from periphery of opening. Cable bundle to be rigidly supported on both sides of floor or wall assembly. Any combination of the following types and sizes of cables may be used:
   A. Max 100 pair No. 24 AWG (or smaller) copper conductor with polyvinyl chloride (PVC) insulation and jacket materials.
   B. Max 1/C No. 500 kcmil (or smaller) copper conductor cable with cross-linked polyethylene (XLPE) jacket.

(System No. C-AJ-8131 Continued)

C. Max 7/C No. 12 AWG (or smaller) copper conductor power and control cables with XLPE or PVC insulation with XLPE or PVC jacket.
D. Max 4/C No. 4/0 AWG (or smaller) copper or aluminum conductor SER cables with PVC insulation and jacket.
E. Max 3/C No. 2/0 AWG (or smaller) copper conductor PVC jacketed aluminum clad or steel clad TEK cable.
F. Max 110/125 fiber optic (F.O.) cable with PVC insulation and jacket.
G. Max 3/C with ground No. 8 AWG (or smaller) copper conductor NM cable (Romex) with PVC insulation and jacket.
H. Max RG/U coaxial cable with fluorinated ethylene insulation and jacket.
I. Max 4 pair No. 24 AWG (or smaller) copper conductor data cable with PVC jacket and insulation.
J. Max 4/C with ground No. 2/0 (or smaller) aluminum or copper conductor **Metal-Clad+** or **Armored-Clad+** cable with steel or aluminum jacketing.

AFC CABLE SYSTEMS

When Item D is used the T Rating is 1/4 hr, otherwise the T Rating is 3/4 Hr.

6. **Firestop System** — The firestop system consists of the following:
   A. **Packing Material** — Min 3 in. depth of min 4 pcf density mineral wool batt insulation tightly-packed into opening. In floors, packing material recessed from top surface of floor or steel sleeve or from both surfaces of precast concrete units as required to accommodate the required thickness of fill material (Item 4B). In walls, packing material recessed from both surfaces of wall or from both ends of sleeve as required to accommodate the required thickness of fill material.
   B. **Fill, Void or Cavity Material*** —**Sealant** — Min 1 in. thickness of fill material applied flush with top surface of floor or both surfaces of wall. At point contact locations, apply a min 3/8 in. diam bead of fill material at the penetrant/steel sleeve or concrete interface.

SPECIFIED TECHNOLOGIES INC — SpecSeal 100, 101, 102, 105, 120 or 129 Sealant

*Bearing the UL Classification Marking
+Bearing the UL Listing Mark

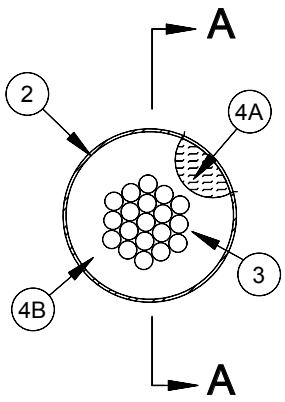

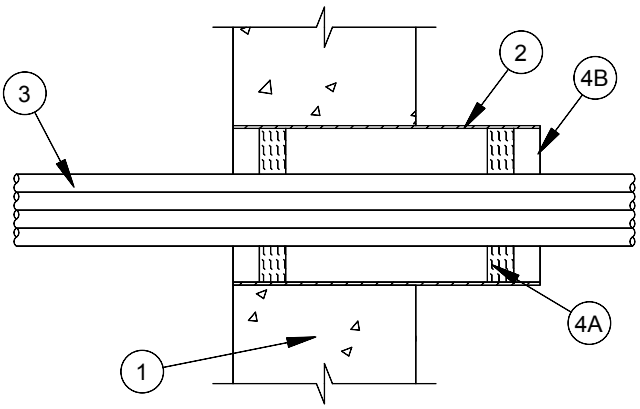

Section A-A

System No. W-J-3090
F Rating — 2 hr
T Rating — 3/4 hr

1. **Wall Assembly** — Min 5 in. thick reinforced lightweight or normal weight (100-150 pcf) concrete. Wall assembly may also be constructed of any UL Classified Concrete Blocks*. Max diam of opening is 4-1/2 in.
   See Concrete Blocks (CAZT) category in the Fire Resistance Directory for names of manufacturers.
2. **Steel Sleeve** — Nom 4 in. diam (or smaller) steel electrical metallic tubing (EMT), steel conduit or Schedule 5 (or heavier) steel pipe sleeve cast or grouted into wall assembly. Sleeve may be installed flush with or extend up to 18 in. beyond one or both wall surfaces.
3. **Cables** — Aggregate cross-sectional area of cables in steel sleeve to be max 48 percent of the aggregate cross-sectional area of the sleeve. Cables to be rigidly supported on both sides of wall assembly. Any combination of the following types and sizes of copper conductor cable may be used:
   A. Max 200 pair No. AWG (or smaller) copper conductor cable with polyvinyl chloride (PVC) jacketing and insulation.
   B. Max 3/C No. 2/0 AWG (or smaller) aluminum or copper conductor service entrance cable with PVC insulation and jacket.
   C. Max 3/C No. 8 AWG (or smaller) nonmetallic sheathed (Romex) cable with copper conductors, PVC insulation and jacket.
   D. Max 7/C No. 2/0 AWG (or smaller) multiconductor power and control cables with XLPE or PVC insulation and XLPE or PVC jacket.
   E. Max RG/U (or smaller) coaxial cable with fluorinated ethylene insulation and jacketing.
   F. Max 62.5/48 fiber optic cable with PVC insulation and jacketing.
   G. Max 4 pair No. 24 AWG (or smaller) copper conductor data cable with PVC insulation and jacket.
   H. Max 4/C No. 2/0 aluminum or copper conductor aluminum or steel Metal-Clad# or Armored-Clad# cable.
4. **Firestop System** — The firestop system shall consist of the following:
   A. **Packing Material** — When required (See table in Item 3B), min 1 in. thickness of min 4 pcf density mineral wool batt insulation firmly packed into each end of sleeve as a permanent form. Packing material to be recessed from each end of sleeve as required to accommodate the required thickness of fill material.
   B. **Fill, Void or Cavity Material*** — **Sealant or Putty** — Fill material applied to appropriate thickness within steel sleeve, flush with edges of steel sleeve on both surfaces of wall. See table below for fill material thickness requirements.

Fill Material Type	Thickness, In.	Packing Material Required
SpecSeal 100 Series Sealant	1/2 in.	Yes
SpecSeal 100 Series Sealant	1 in.	No
SpecSeal LCI Sealant	1 in.	Yes
SpecSeal Putty	1 in.	No

SPECIFIED TECHNOLOGIES INC — SpecSeal Series 100, 101, 102, 120, 129 or 105 Sealant, SpecSeal LCI Sealant or SpecSeal Putty

*Bearing the UL Classification Mark
#Bearing the UL Listing Mark

Created or Revised: 08/02/02
Specified Technologies, Inc., Somerville, NJ (800) 992-1180

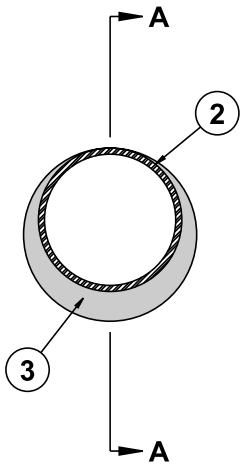

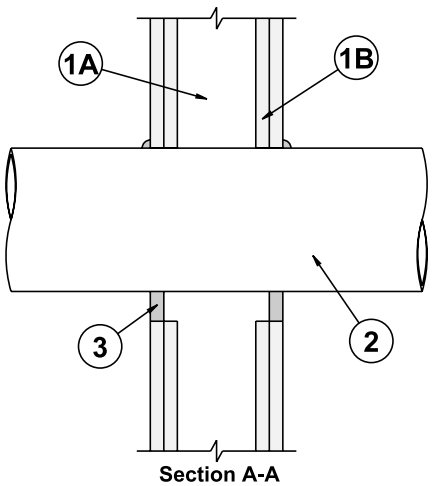

Section A-A

System No. W-L-1049
December 02, 1997
(Formerly System No. 635)
F Ratings — 1 and 2 Hr (See Item 1B)
T Rating — 0 Hr
L Rating At Ambient — Less Than 1 CFM/sq ft
L Rating At 400 F — Less Than 1 CFM/sq ft

1. **Wall Assembly** — The 1 or 2 hr fire-rated gypsum wallboard/stud wall assembly shall be constructed of the materials and in the manner described in the individual U300 or U400 Series Wall or Partition Design in the UL Fire Resistance Directory and shall include the following construction features:
   A. **Studs** — Wall framing may consist of either wood studs or steel channel studs. Wood studs to consist of nom 2 by 4 in. lumber spaced 16 in. OC. Steel studs to be min 3-5/8 in. wide and spaced max 24 in. OC. When steel studs are used and the diam of opening exceeds the width of stud cavity, the opening shall be framed on all sides using lengths of steel stud installed between the vertical studs and screw-attached to the steel studs at each end. The framed opening in the wall shall be 4 to 6 in. wider and 4 to 6 in. higher than the diam of the penetrating item such that, when the penetrating item is installed in the opening, a 2 to 3 in. clearance is present between the penetrating item and the framing on all four sides.
   B. **Gypsum Board*** — 5/8 in. thick, 4 ft wide with square or tapered edges. The gypsum wallboard type, thickness, number of layers, fastener type and sheet orientation shall be as specified in the individual U300 or U400 Series Design in the UL Fire Resistance Directory. Max diam of opening is 25-3/4 in. for steel stud walls. Max diam of opening is 14-1/2 in. for wood stud walls.

   The hourly F Rating of the firestop system is equal to the hourly fire rating of the wall assembly in which it is installed.
2. **Through Penetrant** — One metallic pipe, conduit or tubing to be installed either concentrically or eccentrically within the firestop system. The annular space between pipe, conduit or tubing and periphery of opening shall be min 0 in. (point contact) to max 1-3/4 in. Pipe, conduit or tubing to be rigidly supported on both sides of wall assembly. The following types and sizes of metallic pipes, conduits or tubing may be used:
   A. **Steel Pipe** — Nom 24 in. diam (or smaller) Schedule 10 (or heavier) steel pipe.
   B. **Iron Pipe** — Nom 24 in. diam (or smaller) cast or ductile iron pipe.
   C. **Conduit** — Nom 4 in. diam (or smaller) steel electrical metallic tubing, nom 6 in. diam (or smaller) steel conduit or nom 1 in. diam (or smaller) flexible steel conduit.
   D. **Copper Tubing** — Nom 6 in. diam (or smaller) Type L (or heavier) copper tubing.
   E. **Copper Pipe** — Nom 6 in. diam (or smaller) Regular (or heavier) copper pipe.
3. **Fill, Void or Cavity Material*** — **Sealant** — Min 5/8 in. thickness of fill material applied within annulus, flush with both surfaces of wall. At the point contact location between through penetrant and gypsum wallboard, a min 3/8 in. diam bead of fill material shall be applied at the gypsum wallboard/through penetrant interface on both surfaces of wall.

   SPECIFIED TECHNOLOGIES INC — SpecSeal 100, 101, 102 or 105 Sealant

*Bearing the UL Classification Marking

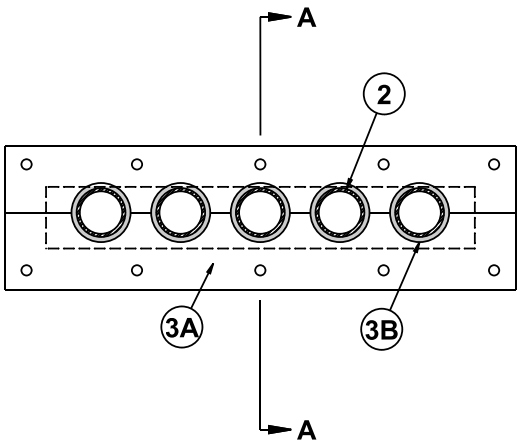

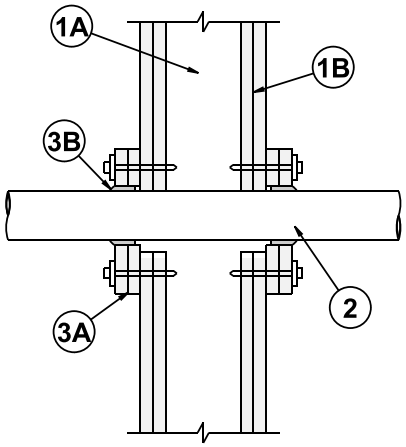

Section A-A

System No. W-L-1093
F Ratings — 1 and 2 Hr (See Item 1)
T Ratings — 1 and 1-1/2 Hr (See Item 1)

1. **Wall Assembly** — The 1 or 2 hr fire-rated gypsum board/stud wall assembly shall be constructed of the materials and in the manner described in the individual U400 Series Wall or Partition Design in the UL Fire Resistance Directory and shall include the following construction features:
   A. **Studs** — Wall framing shall consist of min 3-5/8 in. wide steel channel studs spaced max 24 in. OC.
   B. **Gypsum Board*** — 5/8 in. thick, 4 ft wide with square or tapered edges. The gypsum board type, thickness, number of layers, fastener type and sheet orientation shall be as specified in the individual U400 Series Design in the UL Fire Resistance Directory. Max area of opening is 66 sq in. with max dimension of 22 in.

   The hourly F and T Ratings of the firestop system are dependent on the hourly fire rating of the wall assembly in which it is installed as shown in the table below:

Rating of Wall Hr	F Rating Hr	T Rating Hr
2	2	1-1/2
1	1	1

2. **Through-Penetrants** — One or more pipes, conduits or tubing to be installed within the opening. The space between pipes, conduits or tubing shall be a min of 1/2 in. to a max of 1 in. The space between pipes, conduits or tubing and periphery of opening shall be min 0 in. (point contact) to max 1-1/4 in. Pipe, conduit or tubing to be rigidly supported on both sides of wall assembly. The following types and sizes of pipes, conduits or tubing may be used:
   A. **Steel Pipe** — Nom 2 in. diam (or smaller) Schedule 5 (or heavier) steel pipe.
   B. **Iron Pipe** — Nom 2 in. diam (or smaller) cast or ductile iron pipe.
   C. **Conduit** — Nom 2 in. diam (or smaller) steel electrical metallic tubing or galv steel conduit.
3. **Firestop System** — The firestop system shall consist of the following:
   A. **Gypsum Board*** — Two layers of 5/8 in. thick board cut to fit the contour the through penetrants on both surfaces of the wall. The annular space between the through penetrants and the cutouts of the gypsum board shall be a min of 1/4 in. to a max 3/8 in. Gypsum board shall extend a min of 2 in. beyond the periphery of the opening on both surfaces of the wall. Prior to securing the gypsum board to both surfaces of the wall, a min 1/2 in. diam bead of fill material (Item 3B) applied as a gasket/sealant between each layer of gypsum board. On both surfaces of the wall, each layer of gypsum board to be secured to wall by means of min 1-1/4 in. long Type G steel screws spaced 6 in. OC.
      See **Gypsum Board** (CKNX) category in Vol. 1 of the UL Fire Resistance Directory for names of manufacturers.
   B. **Fill, Void or Cavity Material*** — **Sealant** — On both surfaces of the wall, a min 1/2 in. diam bead of fill material applied as a gasket/sealant between each layer of gypsum board (Item 3A). After installation of both layers of gypsum board, 1 in. thickness of fill material applied within annular space between the cutouts of the gypsum board and the penetrating items. Additional fill material to be installed such that a min 1/4 in. thick crown of fill material applied around the outer circumference of the through penetrants on both surfaces of wall.
      SPECIFIED TECHNOLOGIES INC — SpecSeal LC 150, 151, 152 or 155 Sealant. As an option , SpecSeal 100, 101, 102, 105, 120 or 129 Sealant or SpecSeal LCI Sealant may be used in the the annular space around the penetrating items.

*Bearing the UL Classification Mark

Created or Revised: 03/18/03
Specified Technologies, Inc., Somerville, NJ (800) 992-1180

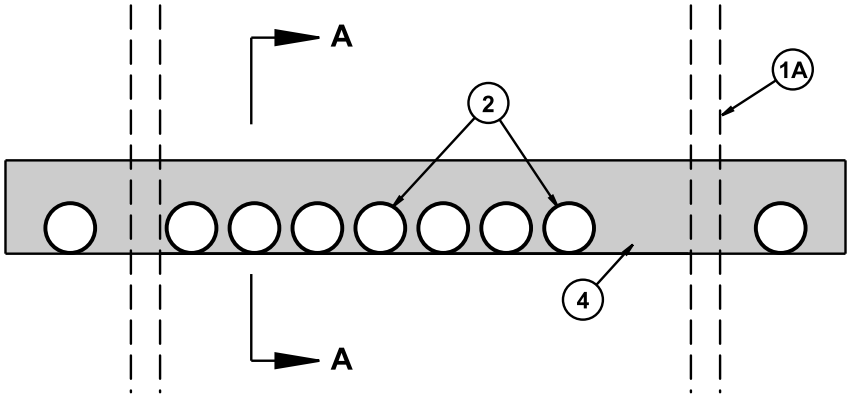

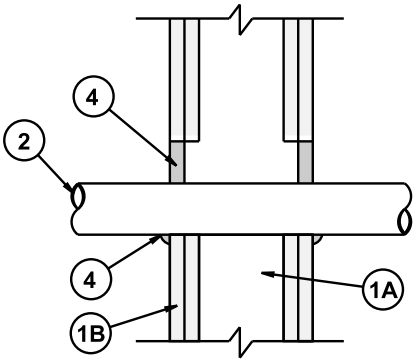

Section A-A

System No. W-L-1168
F Ratings — 1 and 2 Hr (See Item 1)
T Ratings — 1/4, 3/4 and 1 Hr (See Items 2 and 4)

1. **Wall Assembly** — The 1 or 2 hr fire-rated gypsum wallboard/stud wall assembly shall be constructed of the materials and in the manner described in the individual U400 Series Wall or Partition Designs in the UL Fire Resistance Directory and shall include the following construction features:
   A. **Studs** — Wall framing shall consist of min 3-5/8 in. wide steel studs spaced max 24 in. OC.
   B. **Gypsum Board*** — Thickness, type, number of layers and fasteners, as specified in the individual U400 Series design . Max height of opening is 6 in. Max width of opening is 36 in.
2. **Through Penetrants** — Multiple pipes or conduits installed in single layer array within the firestop system. The annular space between the pipes and conduits and the edges of the opening shall be min 0 in. (point contact) to max 3 in. The separation between pipes and conduits to be min 1/4 in. to max 3 in. Pipes and conduits to be rigidly supported on both sides of wall assembly. The following types and sizes of metallic pipe or conduit may be used:
   A. **Steel Pipe** — Nom 4 in. diam (or smaller) Schedule 5 (or heavier) steel pipe.
   B. **Conduit** — Nom 4 in. diam (or smaller) rigid steel conduit or steel electrical metallic tubing (EMT).
   When diam of pipe or conduit is greater than 2 in., T Rating is 1/4 hr. Otherwise, T Rating is 3/4 hr or 1 hr as detailed in Item 4.
3. **Forming Material** — (Optional, Not Shown) — Foam backer rod, mineral wool batt insulation or glass fiber insulation packed into opening and recessed min 5/8 in. from each surface of the wall to accommodate fill material.
4. **Fill Void or Cavity Materials*** — **Sealant** — Min 5/8 in. thickness of fill material installed to completely fill annular space between pipes, conduits and gypsum wallboard flush with each surface of wall. Min 1/4 in. diam bead of fill material applied to the pipe/wall interface at the point contact locations on both sides of the wall.
   SPECIFIED TECHNOLOGIES INC — SpecSeal LC150 Sealant, SpecSeal 100, 101, 102, 105, 120 or 129 Sealant, Spec-Seal LCI Sealant. When SpecSeal LC150 Sealant is used with max 2 in. diam pipe or conduit, T Rating is 3/4 hr. **When SpecSeal LCI or SpecSeal 100, 101, 102, 105, 120 or 129 Sealant is used with max 2 in. diam pipe or conduit, T Rating 1 hr.**

*Bearing the UL Classification Mark

Created or Revised: 11/13/02
Specified Technologies, Inc., Somerville, NJ (800) 992-1180

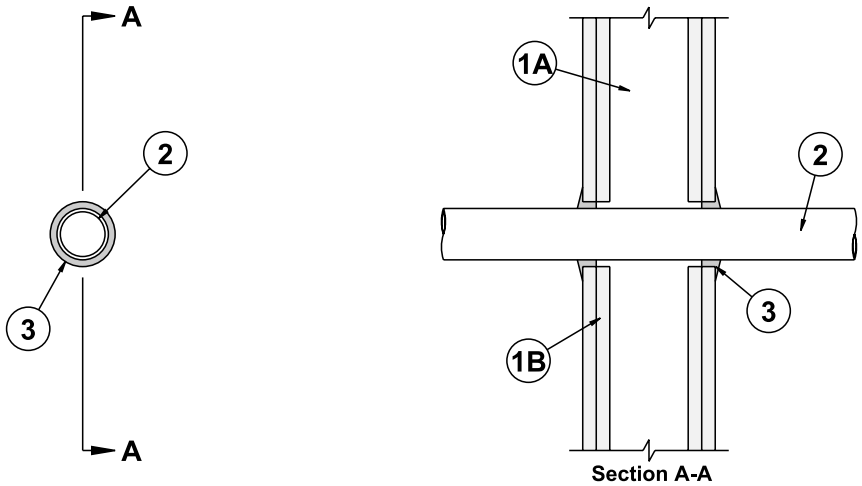

System No. W-L-2093
April 30, 1998
F Ratings — 1 and 2 Hr (See Item 1)
T Ratings — 1 and 1-1/2 Hr (See Item 2)

1. **Wall Assembly** — The 1 or 2 hr fire-rated gypsum wallboard/stud wall assembly shall be constructed of the materials and in the manner described in the individual U300 or U400 Series Wall or Partition Design in the UL Fire Resistance Directory and shall include the following construction features:
   A. **Studs** — Wall framing may consist of either wood studs or steel channel studs. Wood studs to consist of nom 2 by 4 in. lumber spaced 16 in. O.C. with nom 2 by 4 in. lumber end plates and cross braces. Steel studs to be min 3-5/8 in. wide and spaced max 24 in. O.C.
   B. **Gypsum Board*** — 5/8 in. thick, 4 ft wide with square or tapered edges. The gypsum wallboard type, thickness, number of layers, fastener type and sheet orientation shall be as specified in the individual U300 or U400 Series Design in the UL Fire Resistance Directory. Max diam of opening is 3 in.

   The hourly F Rating of the firestop system is equal to the hourly fire rating of the wall assembly in which it is installed.
2. **Through Penetrants** — One nonmetallic pipe, conduit or raceway to be centered within the firestop system. A nom annular space of 5/16 in. is required within the firestop system. Pipe, conduit or raceway to be rigidly supported on both sides of the floor or wall assembly. The following types and sizes of nonmetallic pipes, conduits or raceway may be used:
   A. **Polyvinyl Chloride (PVC) Pipe** — Nom 2 in. diam (or smaller) Schedule 40 cellular or solid core PVC pipe for use in closed (process or supply) piping systems.
   B. **Rigid Nonmetallic Conduit+** — Nom 2 in. diam (or smaller) Schedule 40 PVC conduit installed in accordance with Article 347 of the National Electrical Code (NFPA No. 70).
   C. **Chlorinated Polyvinyl Chloride (CPVC) Pipe** — Nom 2 in. diam (or smaller) SDR17 CPVC pipe for use in closed (process or supply) piping systems.
   D. **Optical Fiber Raceway+** — Nom 2 in. diam (or smaller) optical fiber raceway formed from polyvinyl chloride (PVC) or nom 1-1/4 in. diam (or smaller) optical fiber raceway formed from polyvinylidene fluoride (PVDF). Raceway to be installed in accordance with Article No. 770 of the National Electrical Code. Raceway to be rigidly supported on both sides of wall assembly. See Optical Fiber Raceway (QAZM) category in the Electrical Construction Materials Directory for names of manufacturers.
   E. **Electrical Nonmetallic Tubing+** — Nom 2 in. diam (or smaller) PVC tubing installed in accordance with Article 331 of the National Electrical Code (NFPA No. 70).
      See **Electrical Nonmetallic Tubing** (FKHU) category in the Electrical Construction Materials Directory for names of manufacturers.

   The hourly T Rating of the firestop system is dependent upon the hourly fire rating of the wall and the diam of the through-penetrant as shown below:

Wall, Hr	Max Diam of Through Penetrant, In.	T Rating, Hr
1	2	1
1	1-1/4	1
2	2	1
2	1-1/4	1-1/2

3. **Fill, Void or Cavity Material*** — **Sealant** — Min 5/8 in. thickness of fill material applied within annulus, flush with both surfaces of wall. Additional fill material to be installed such that a min 1/4 in. thick crown is formed around the penetrating item and lapping 1 in. beyond the periphery of the opening.
   SPECIFIED TECHNOLOGIES INC — SpecSeal 100, 101, 102 or 105 Sealant

+Bearing the UL Listing Mark
*Bearing the UL Classification Marking

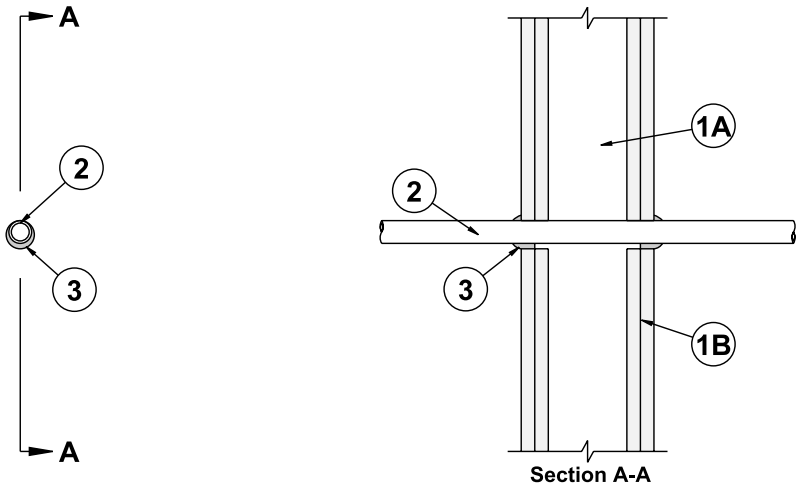

System No. W-L-3024
January 06, 1999
F Ratings — 1 and 2 Hr (See Items 2 and 2A)
T Ratings — 0, 1/2, 1 and 2 Hr (See Items 2 and 2A)
L Rating At Ambient — Less Than 1 CFM/sq ft
L Rating At 400 F — Less Than 1 CFM/sq ft

1. **Wall Assembly** — The 1 or 2 hr fire rated gypsum wallboard/stud wall assembly shall be constructed of the materials and in the manner specified in the individual U300 or U400 Series Wall and Partition Designs in the UL Fire Resistance Directory and shall include the following construction features:
   A. **Studs** — Wall framing may consist of either wood studs or steel channel studs. Wood studs to consist of nom 2 by 4 in. lumber spaced 16 in. OC. Steel studs to be min 2-1/2 in. wide and spaced max 24 in. OC.
   B. **Gypsum Board*** — 5/8 in. thick, 4 ft wide with square or tapered edges. The gypsum wallboard type, thickness, number of layers, fastener type and sheet orientation shall be as specified in the individual U300 or U400 Series Design in the UL Fire Resistance Directory. Max diam of opening is 2-1/2 in.

   The hourly F Rating of the firestop system is equal to the hourly fire rating of the wall assembly in which it is installed.
2. **Cables** — One cable to be installed either concentrically or eccentricity within the firestop system. The annular space within the firestop system shall be a min 0 in. (point contact) to a max 1/4 in. Cable to be rigidly supported on both sides of wall assembly. The following types and sizes of cables may be used:
   A. Max 200 pair No. 24 AWG (or smaller) copper conductor cable with polyvinyl chloride (PVC) jacketing and insulation. **When 200 pair No. 24 AWG telephone cable is used, T Rating is 0 hr. When 50 pair No. 24 AWG telephone cable is used, T Rating is 1 or 2 hr.**
   B. Max 3/C No. 2/0 AWG (or smaller) aluminum conductor service entrance cable with PVC insulation and jacketing. **When service entrance cable is used, the T Rating is 1/2 hr.**
   C. Max 1/C-750 kcmil copper conductor power cable with cross-linked polyethylene (XLPE) insulation and jacketing. **When 1/C-750 kcmil cable is used, the T Rating is 0 hr.**
   D. Max 3/C No. 8 AWG (or smaller) PVC insulated and jacketed nonmetallic sheathed (Romex) cable. **When Romex is used, the T Rating is 1 or 2 hr.**
   E. Max RG59/U (or smaller) coaxial cable with fluorinated ethylene insulation and jacketing. **When coaxial cable is used, the T Rating is 1 or 2 hr.**
   F. Max 62.5/125 micron fiber optic cable with PVC insulation and jacketing. **When fiber optic cable is used, the T Rating is 1 or 2 hr.**
   G. Max 4 pair No. 24 AWG (or smaller) copper conductor data cable with Hylar insulation and jacketing. **When data cable is used, the T Rating is 1 or 2 hr.**

2A. **Through-Penetrating Product*** — As an alternate to Item 2, max four copper conductor No. 2/0 AWG (or smaller) aluminum or steel Armored+ or Metal-Clad+ Cable. Max one armored cable or metal-clad cable to be installed either concentrically or eccentrically within the firestop system. Through-penetrating product to be rigidly supported on both sides of wall assembly. **When armored or metal-clad cable is used, the T Rating is 1/2 hr.**

AFC CABLE SYSTEMS INC

3. **Fill Void or Cavity Material*** — **Sealant or Putty** — Min 5/8 in. thickness of fill material installed within annulus, flush with both surfaces of wall assembly. Additional fill material installed such that a min 1/4 in. diam crown is formed around the through-penetrant on both sides of the wall.

SPECIFIED TECHNOLOGIES INC — SpecSeal Series 100 Sealant or SpecSeal Putty

*Bearing the UL Classification Marking
+Bearing the UL Listing Mark

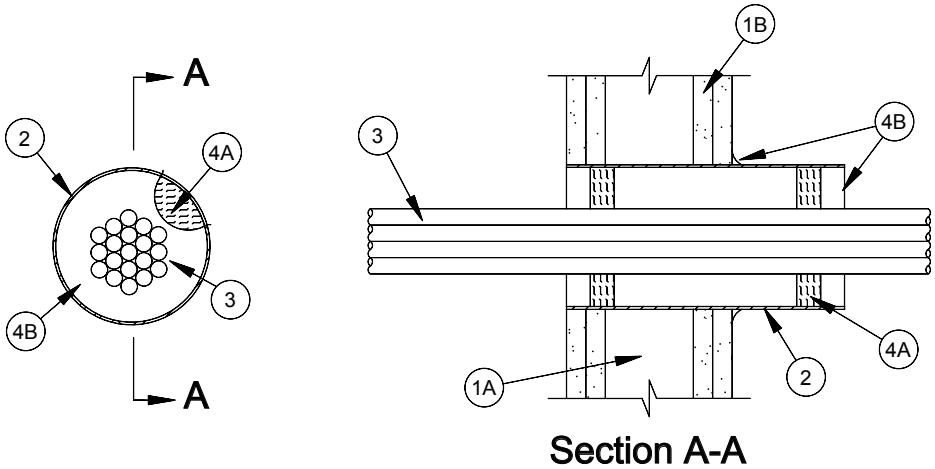

System No. W-L-3210
F Ratings — 1 and 2 hr (See Item 1)
T Rating — 3/4 hr

1. **Wall Assembly** — The 1 or 2 hr fire rated gypsum board/stud wall assembly shall be constructed of the materials and in the manner specified in the individual U300 or U400 Series Wall and Partition Designs in the UL Fire Resistance Directory and shall include the following construction features:
   A. **Studs** — Wall framing may consist of either wood studs or steel channel studs. Wood studs to consist of nom 2 by 4 in. lumber spaced 16 in. OC. Steel studs to be min 3-1/2 in. wide and spaced max 24 in. OC.
   B. **Gypsum Board*** — 5/8 in. thick, 4 ft wide with square or tapered edges. The gypsum board type, thickness, number of layers, fastener type and sheet orientation shall be as specified in the individual U300 or U400 Series Design in the UL Fire Resistance Directory. Max diam of opening is 4-1/2 in.

      The hourly F rating of the firestop system is equal to the hourly fire rating of the wall assembly in which it is installed.
2. **Steel Sleeve** — Nom 4 in. diam (or smaller) steel electrical metallic tubing (EMT), steel conduit or Schedule 5 (or heavier) steel pipe sleeve friction-fitted into wall assembly. Sleeve may be installed flush with or extend up to 18 in. beyond one or both wall surfaces.
3. **Cables** — Aggregate cross-sectional area of cables in steel sleeve to be max 48 percent of the aggregate cross-sectional area of the sleeve. Cables to be rigidly supported on both sides of wall assembly. Any combination of the following types and sizes of copper conductor cable may be used:
   A. Max 200 pair No. AWG (or smaller) copper conductor cable with polyvinyl chloride (PVC) jacketing and insulation.
   B. Max 3/C No. 2/0 AWG (or smaller) aluminum or copper conductor service entrance cable with PVC insulation and jacket.
   C. Max 3/C No. 8 AWG (or smaller) nonmetallic sheathed (Romex) cable with copper conductors, PVC insulation and jacket.
   D. Max 7/C No. 2/0 AWG (or smaller) multiconductor power and control cables with XLPE or PVC insulation and XLPE or PVC jacket.
   E. Max RG/U (or smaller) coaxial cable with fluorinated ethylene insulation and jacketing.
   F. Max 62.5/48 fiber optic cable with PVC insulation and jacketing.
   G. Max 4 pair No. 24 AWG (or smaller) copper conductor data cable with PVC insulation and jacket.
   H. Max 4/C No. 2/0 aluminum or copper conductor aluminum or steel Metal-Clad# or Armored-Clad# cable.
4. **Firestop System** — The firestop system shall consist of the following:
   A. **Packing Material** — When required (See table in Item 3B), min 1 in. thickness of min 4.0 pcf mineral wool batt insulation firmly packed into each end of sleeve as a permanent form. Packing material to be recessed from each end of sleeve as required to accommodate the required thickness of fill material.
   B. **Fill, Void or Cavity Material*** — **Sealant or Putty** — Fill material applied to appropriate thickness within steel sleeve, flush with edges of steel sleeve on both surfaces of wall. Min 1/2 in. diam bead of sealant or "rope" of putty shall be applied around the perimeter of the sleeve on each side of the wall when sleeve extends beyond surface of wall. See table below for fill material thickness requirements.

Sealant or Putty Type	Thickness, In.	Packing Material Required
SpecSeal 100 Series Sealant	1/2 in.	Yes
SpecSeal 100 Series Sealant	1 in.	No
SpecSeal LCI Sealant	1 in.	Yes
SpecSeal Putty	1 in.	No

SPECIFIED TECHNOLOGIES INC — SpecSeal Series 100, 101, 102, 120, 129 or 105 Sealant, SpecSeal LCI Sealant or SpecSeal Putty.

*Bearing the UL Classification Mark

Created or Revised: 08/02/02
Specified Technologies, Inc., Somerville, NJ (800) 992-1180

Online Certifications Directory

CLIV.R14288
Wall Opening Protective Materials

Page Bottom Questions? Previous Page

Wall Opening Protective Materials

Guide Information

SPECIFIED TECHNOLOGIES INC R14288
SUITE 2
200 EVANS WAY
SOMERVILLE, NJ 08876 USA

SpecSeal Power Shield EP23 Box Inserts, for use with max 2 by 3 by 2-1/4 in. deep flush device UL Listed Metallic Outlet Boxes without internal clamps installed with steel extension rings and steel cover plates in 2 h fire rated gypsum board wall assemblies framed with min 3-5/8 in. deep steel studs and constructed of the materials and in the manner specified in the individual U400 or V400 Series Wall and Partition Designs in the Fire Resistance Directory. One 1-7/8 by 2-3/4 in. insert adhered to the interior back wall of the outlet box in accordance with the instructions supplied with the product. Installation to comply with Article 370-16 of the National Electrical Code (NFPA 70). When protective material is used within outlet boxes on both sides of the wall as directed, the horizontal separation between outlet boxes on opposite sides of the wall may be less than 24 in. provided that the boxes are not installed back-to-back.

SpecSeal Power Shield EP24 Box Inserts, for use with max 2-1/8 by 4 by 2-1/8 in. deep flush device UL Listed Metallic Outlet Boxes without internal clamps installed with steel mud rings and steel cover plates in 2 h fire rated gypsum board wall assemblies framed with min 3-5/8 in. deep steel studs and constructed of the materials and in the manner specified in the individual U400 or V400 Series Wall and Partition Designs in the Fire Resistance Directory. One 1-7/8 by 3-3/4 in. insert adhered to the interior back wall of the outlet box in accordance with the instructions supplied with the product. Installation to comply with Article 370-16 of the National Electrical Code (NFPA 70). When protective material is used within outlet boxes on both sides of the wall as directed, the horizontal separation between outlet boxes on opposite sides of the wall may be less than 24 in. provided that the boxes are not installed back-to-back.

SpecSeal Power Shield EP44 Box Inserts, for use with max 4 by 4 by 2-1/8 in. flush device UL Listed Metallic Outlet Boxes without internal clamps installed with steel mud rings and steel cover plates in 2 h fire rated gypsum board wall assemblies framed with min 3-5/8 in. deep steel studs and constructed of the materials and in the manner specified in the individual U400 or V400 Series Wall and Partition Designs in the Fire Resistance Directory. One 3-3/4 by 3-3/4 in. insert adhered to the interior back wall

of the outlet box in accordance with the instructions supplied with the product. Installation to comply with Article 370-16 of the National Electrical Code (NFPA 70). When protective material is used within outlet boxes on both sides of the wall as directed, the horizontal separation between outlet boxes on opposite sides of the wall may be less than 24 in. provided that the boxes are not installed back-to-back.

SpecSeal Putty Pads, for use with max 4-11/16 by 4-11/16 in. flush device UL Listed metallic outlet boxes installed with steel cover plates in 1 and 2 h fire rated gypsum board wall assemblies framed with min 3-1/2 in. deep wood or steel studs and constructed of the materials and in the manner specified in the individual U300, U400 or V400 Series Wall and Partition Designs in the Fire Resistance Directory. Min 3/16 in. thick moldable putty pads are to be installed to completely cover the exterior surfaces of the outlet box (except for the side of the outlet box against the stud) and completely seal against the stud within the stud cavity. An additional 3/16 in. thickness of putty to be formed around the connector securing the end of each electrical metallic tube or conduit to the box. When used with metallic outlet boxes larger than 4 by 4 in., a ball of putty is to be installed to plug the open end of each electrical metallic tube or conduit within the outlet box. When max 4 by 4 in. metallic outlet boxes are used, the ball of putty in the open end of each electrical metallic tube or conduit within the outlet box is optional. When moldable putty pad outlet box protective material is used on boxes on both sides of wall as directed, the horizontal separation between outlet boxes on the opposite sides of the wall may be less than 24 in. provided that the boxes are not installed back-to-back.

SpecSeal Putty Pads , for use with max 4 by 4 in. flush device UL Listed metallic outlet boxes installed with plastic cover plates in 1 h fire rated gypsum board wall assemblies framed with min 3-1/2 in. deep wood or steel studs and constructed of the materials and in the manner specified in the individual U300, U400 or V400 Series Wall and Partition Designs in the Fire Resistance Directory. Min 3/16 in. thick moldable putty pads are to be installed to completely cover the exterior surfaces of the outlet box (except for the side of the outlet box against the stud) and completely seal against the stud within the stud cavity. An additional 3/16 in. thickness of putty to be formed around the connector securing the end of each electrical metallic tube or conduit to the box. A ball of putty is to be installed to plug the open end of each electrical metallic tube or conduit within the outlet box. When moldable putty pad outlet box protective material is used on boxes on both sides of wall as directed, the horizontal separation between outlet boxes on the opposite sides of the wall may be less than 24 in. provided that the boxes are not installed back-to-back.

SpecSeal Putty Pads , for use with max 14 by 4-1/2 by 2-1/2 in. deep flush device UL Listed metallic outlet boxes installed with steel cover plates in 2 h fire rated gypsum board wall assemblies framed with min 3-1/2 in. deep steel studs and constructed of the materials and in the manner specified in the individual U400 or V400 Series Wall and Partition Designs in the Fire Resistance Directory. Min 3/16 in. thick moldable putty pads are to be installed to completely cover the exterior surfaces of the outlet box (except for the side of the outlet box against the stud) and completely seal against the stud within the stud cavity. Adjoining lengths of moldable putty pads to be overlapped approx 1/2 in. at the seam. An additional 3/16 in. thickness of putty to be formed around the connector securing the end of each Type MC cable, electrical metallic tube or conduit to the box. A ball of putty is to be installed to plug the open end of each electrical metallic tube or conduit within the outlet box.

SpecSeal Putty Pads for use with max 4 by 3-3/4 by 3 in. deep UL Listed Nonmetallic Outlet Boxes manufactured by Carlon Electrical Products and made from polyvinyl chloride, max 4 by 3-3/4 by 3 in. deep UL Listed Nonmetallic Outlet Boxes manufactured by Allied Moulded Products Inc. and made from fiber-reinforced thermosetting plastic or max 4-1/16 by 3-5/8 by 3-1/8 in. deep UL Listed Nonmetallic Outlet Boxes manufactured by Thomas & Betts Corp. and made from fiber-reinforced thermosetting plastic. Boxes shall also bear a 2 h rating under the "Outlet Boxes and Fittings Classified for Fire Resistance" category in the Fire Resistance Directory. Boxes installed with steel or plastic cover

plates. Putty pads and boxes for use in 1 and 2 h fire rated gypsum board/wood stud wall assemblies constructed of the materials and in the manner specified in the individual U300 Series Wall and Partition Designs in the Fire Resistance Directory. Outlet box secured to wood stud by means of two nailing tabs in conjunction with nails supplied with the outlet box. Min 3/16 in. thick moldable putty pads are to be installed to completely cover the exterior surfaces of the outlet box (except for the side of the outlet box against the stud) including nailing tabs and completely seal against the stud within the stud cavity. An additional 3/16 in. thickness of putty to be formed around the end of each nonmetallic sheathed cable at its connection to the box and to extend a minimum of 1 in. from the box onto the nonmetallic sheathed cable within the stud cavity. When moldable putty pad outlet box protective material is used on boxes on both sides of wall as directed, the horizontal separation between outlet boxes on opposite sides of the wall may be less than 24 in. provided that the boxes are not installed back-to-back.

Page Top **Notice of Disclaimer** **Questions?** Previous Page

UL Listed and Classified Products **UL Recognized Components** **Products Certified for Canada**

Specified
Technologies
Inc.

200 Evans Way, Suite 2
Somerville, N .J. 08876
Phone: (908) 526-8000
Fax: (908) 526-9623
Toll Free: (800) 992-1180

GENERAL CERTIFICATE of CONFORMANCE

Description: SpecSeal® Firestop Products

Included Products:

Series SSS Intumescent Sealant
Series LCI Intumescent Sealant
Series LC Latex Endothermic Sealant
Series SSP Intumescent Putty
Series EP Power Shield™ Box Insert
Series SSWRED Intumescent Wrap Strips
Series SSWBLU Intumescent Wrap Strips
Series SSC Intumescent Firestop Collars
Series LCC Intumescent Firestop Collars
Series SSB Intumescent Firestop Pillows
Series AS100 Elastomeric Spray
Series AS200 Elastomeric Spray
Series ES100 Elastomeric Sealant
Series SSM Firestop Mortar
Pensil Series PEN200 Silicone Foam
Pensil Series PEN300 Silicone Sealant
Pensil Series PEN300SL Silicone Sealant

These products are tested to the following standards where applicable:

ASTM STANDARD:

E 814	Fire Tests of Through-Penetration Fire Stops
E 119	Fire Tests of Building Construction and Materials
E 1966	Fire-Resistive Joint Systems
E 84	Surface Burning Characteristics of Building Materials
E 1399	Cyclic Movement and Measuring the Minimum and Maximum Joint Widths of Architectural Joint Systems

UL STANDARD

1479	Fire Tests of Through-Penetration Firestops
263	Fire Tests of Building Construction and Materials
2079	Tests for Fire-Resistance of Building Joint Systems
723	Tests for Surface Burning Characteristics of Building Materials

Chemical Content Statements:

No asbestos, PCB's or water-soluble intumescent ingredients are used or contained in these products.

February 1, 2002

James P. Stahl, Jr.
Technical Manager

Date

Specified Technologies, Inc.

PRODUCT DATA SHEET

SpecSeal FIRESTOP PRODUCTS Series SSS Intumescent Sealant

CLASSIFIED UL 3L73

FILL, VOID OR CAVITY MATERIALS CLASSIFIED BY UNDERWRITERS LABORATORIES INC. ® FOR USE IN THROUGH-PENETRATION FIRESTOP SYSTEMS.

SEE UL FIRE RESISTANCE DIRECTORY

CLASSIFIED UL C

CLASSIFIED FILL, VOID, OR CAVITY MATERIALS FOR USE IN THROUGH-PENETRATION FIRESTOP SYSTEMS. SEE UL DIRECTORY OF PRODUCTS CERTIFIED FOR CANADA AND UL FIRE RESISTANCE DIRECTORY

FM APPROVED

FEATURES

- **Water-Based** for easy installation, cleanup, and disposal.
- **Two-Stage Intumescence** features extremely fast and directionalized expansion.
- **Endothermic Fillers** absorb heat & release water.
- **High Solids Formula** means no shrinkage!
- **Sandable & Paintable** (when dry)
- **Water-Resistant:** Will not re-emulsify when dry!
- **Safe** for contact with plastics.
- **Red Color** for easy identification and inspection.
- **Multi Viscosity Grade** means excellent caulking properties along with high build capabilities.
- **Excellent Smoke Seal**
- **Low VOC:** Safe, No Solvents,

1. PRODUCT DESCRIPTION

SpecSeal® Series SSS Sealant is a latex based, high solids firestop compound. This material, when properly installed, will effectively seal penetration openings against the spread of fire, smoke, toxic gasses and water.

SpecSeal® Series SSS Sealant features STI's patented and proprietary two-stage intumescent technology. When exposed to high temperatures or fire, this material expands aggressively in a highly directionalized fashion to quickly close off voids left by the burning or melting of combustible materials.

SpecSeal® Series SSS Sealant's unique multi-viscosity formula yields a single grade that has excellent caulking properties as well as high build properties on vertical or overhead surfaces. This single grade may be pumped, caulked (standard cartridge or bulk loaded), knifed or troweled. In addition, SpecSeal® SSS does not contain PCB's or asbestos.

SpecSeal® Series SSS Sealant is storage stable (when stored according to the manufacturer's recommendations) and will not separate nor shrink when dried. SpecSeal® Series SSS Sealant will adhere to all common construction and penetrant materials and contains no solvents that might adversely effect plastic pipes or cable jackets.

2. APPLICATIONS

See Table A for a summary application list.

Series SSS Sealant is used to seal through-penetrations as well as construction gaps and blank openings. Series SSS has been tested for use with metallic penetrants up to 30" trade size. This product is also used with other SpecSeal® Products such as SpecSeal® Firestop Collars and Wrap Strips.

3. PHYSICAL PROPERTIES

See Table B.

4. PERFORMANCE

SpecSeal® Series SSS Sealant is the basis for systems that meet the exacting criteria of ASTM E814 (UL1479) as well as to the time-temperature requirements of ASTM E119 (UL263). Systems have been tested for all common forms of construction and most common penetrants with ratings up to 4 hours. STI firestop systems are designed to maximize the fire resistance of the seal by not only sealing off the spread of fire and hot gasses but also by minimizing the amount of heat conducted through the assembly.

5. SPECIFICATIONS

The firestopping sealant shall be a one-part, two-stage intumescent latex compound. The sealant when exposed to high heat or flame shall be capable of expanding a minimum of 8 times. Range of continuing expansion shall be from 230°F to >1,000°F. The sealant shall be thixotropic and shall be capable of caulking or troweling onto vertical surfaces or overhead. The sealant shall be UL Classified and/or FM Systems Approved and tested to the requirements of ASTM E814 (UL1479).

SPECIFIED DIVISIONS

DIV.	7	07840	Through-Penetration Firestopping
DIV.	13	13900	Special Construction Fire Suppression & Supervisory Systems
DIV.	15	15250	Mechanical Insulation – Fire Protection
DIV.	16	16050	Basic Electrical Materials & Methods

Table A: APPLICATIONS

- **Metallic Pipes** including steel, iron, or copper pipe and tubing through all common constructions.
- **Nonmetallic Pipes, Conduits &Tubing** including PVC, CPVC, PVDF, PEX, PEX-AL-PEX, ABS, PB through all common constructions.
- **Cable, Cable Trays & Bus Duct**
- **HVAC Ductwork**
- **Insulated Pipes**
- **Multi-Service Penetrations** including AC line sets, electrical, telephone, or TV service entrance and interior penetrations.
- **Complete Wood Floor** firestopping package for electrical, plumbing, HVAC, TV and telephone.

Table B: PHYSICAL PROPERTIES

Product Name	Series SSS Sealant
Color	Red
Odor	Mild Latex
Density	9.4 Lb/Gal
Solids	80% ± 2%
pH	8.3
Expansion Begins	230°F (110°C) 1st Stage 350°F (177°C) 2nd Stage
Expansion Range	230°F to >1,000°F (110°C to > 538°C)
Volume Expansion	> 500% Free Expansion
In-Service Temp.	130°F
Flame Spread	0*
Smoke Development	10*
STC Rating	51
VOC Content**	0.18 lbs/gal (22.0 g/l)

* Tested to ASTM E84 (UL723) at 14% surface coverage (modified test for sealants and caulks)
**ASTM D3960 and EPA Federal Reference Method 24

Shown below and on the following page are just a few of the most common applications for SpecSeal Series SSS Sealant. Consult the Technical Library at www.stifirestop.com for over 200 available designs utilizing this product.

Fig. 1: METALLIC PIPE PENETRATIONS - CONCRETE/MASONRY FLOORS & WALLS

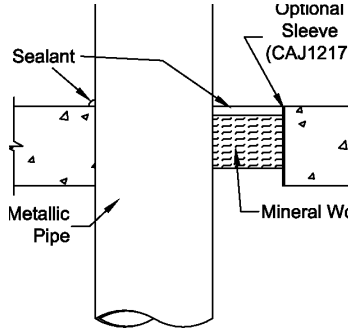

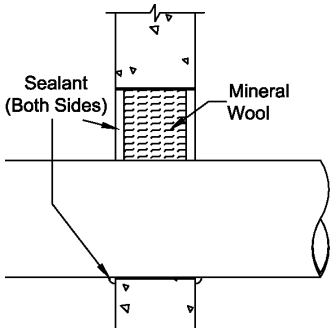

UL SYSTEM C-AJ-1079
F Rating: 4 Hr • T Rating: 0
Steel or Iron Pipe: 24", Copper Pipe 6"
Annulus: Point Contact to 4" • S alant Depth: 1/2"
Forming Material: Nom 4 pcf Mineral Wool
Thickness: 1-1/2" for 6" Steel or Iron Pipe
3" for 4" Copper or 6" Iron or Steel Pipe

UL SYSTEM C-AJ-1217
F Rating: 4 Hr • T Rating: 0
Steel or Iron Pipe: 30", Copper Pipe 6"
Annulus: Point Contact to 2" • S alant Depth: 1/2"
Forming Material: Nom 4 pcf Mineral Wool
Tightly Packed to a 3" Depth.

Fig. 2: INSULATED METALLIC PIPE PENETRATIONS - CONCRETE/MASONRY FLOORS & WALLS

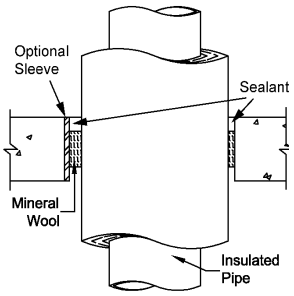

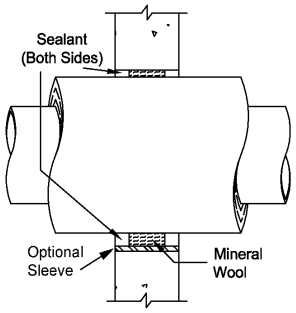

UL SYSTEM C-AJ-5087
F Rating: 2 Hr • T Rating: 1
Steel or Iron Pipe: 24"
Insulated with 2" Thick Fiber Glass or Mineral Wool Pipe Insulation
Annulus: 1/2" to 1-1/2" • S alant Depth: 1/2"
Forming Material: Nom 4 pcf Mineral Wool Tightly Packed to a 4" Depth.

Table C: SEALANT REQUIREMENTS IN CUBIC INCHES PER HALF INCH OF INSTALLED DEPTH*

Pipe Size		Diameter of Opening (in.)											
Trade Size	Pipe O.D.	1.5	2.0	3.0	4.0	5.0	6.0	7.0	8.0	10	12	14	26
0.5˝	**0.840**	0.61	1.29	3.26	6.01								
1˝	**1.315**	0.20	0.89	2.86	5.60	9.14							
1.5˝	**1.900**			2.12	4.87	8.40							
2˝	**2.375**			1.32	4.07	7.60	11.92						
2.5˝	**2.875**				3.04	6.57	10.89						
3˝	**3.500**				1.47	5.01	9.33	14.43	20.32				
3.5˝	**4.000**					3.53	7.85	12.96	18.85				
4˝	**4.500**					1.87	6.19	11.29	17.18	31.32	48.60		
6˝	**6.625**							2.01	7.90	22.03	39.31		
8˝	**8.625**									10.04	27.34		
10˝	**10.750**										11.17	31.59	
12˝	**12.750**											13.13	
24˝	**24.000**												39.27

***Different Sealant Depth?**

1/2˝	*Multiply by 2*
5/8˝	*Multiply by 2.5*
1˝	*Multiply by 4*
1-1/4˝	*Multiply by 5*

IMPORTANT NOTE: This table is for estimation purposes only. Consult UL Fire Resistance Directory or STI Product & Application Guide for specific installation requirements and limitations

Thus all systems have been designed to provide T Ratings capable of matching the rating of the wall or floor assembly (where possible) when tested without penetrants.

5. SPECIFICATIONS

See page 1.

6. INSTALLATION INSTRUCTIONS

General: Areas to be protected must be clean and free of oil, loose dirt, rust or scale. Installation temperatures must be between 35°F and 100°F. Allow product to dry a minimum of 24 hours before exposure to moisture.

System Selection: Selection of an appropriate firestop system design is critical to the fire protection process. Space limitations preclude highly detailed information pertaining to individual application systems. Please consult the STI Product & Application Guide as well as the UL® Fire Resistance Directory for additional information.

Forming: Some installations may require forming as either an integral part of the system or as an option to facilitate installation. In systems where forming is required, mineral wool batts (1-1/2" to 3" nominal thickness, 4 lb./cu. ft. density) are recommended. Some gypsum wallboard systems utilize fiberglass. Cut forming material over-size to allow for tight packing. Position forming material to allow for the proper depth of fill material.

Fill Material: SpecSeal® Series SSS Sealant may be installed by caulking using a standard caulking gun or from bulk containers using a bulk loading caulk gun, or by manually troweling using a mason's trowel or putty knife. If the sealant tends

Fig. 3: ELECTRICAL, DATA OR COMMUNICATIONS PENETRATIONS - RATED GYPSUM WALLBOARD ASSEMBLIES

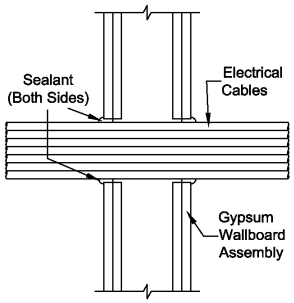

UL SYSTEM W-L-3076
F Rating: 1 or 2 Hr • T Rating: 0 hr
Up to 4" Cable Bundle
Centered in 4 - 1/2" Opening
Sealant Depth: 5/8" with 1/4" Crown

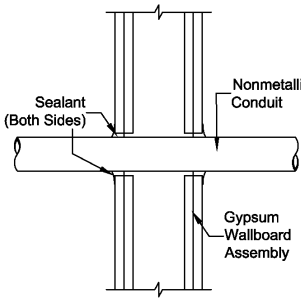

UL SYSTEM W-L-2093
F Rating: 1 or 2 Hr • T Rating: 1, 1-1/2 Hr
2" Rigid PVC, ENMT,
or Optical Fiber Raceway.
1-1/4" PVDF Optical Fiber Raceway.
Sealant Depth: 5/8" with 1/4" Crown

Fig. 4: ELECTRICAL PENETRATIONS - CONCRETE/MASONRY FLOORS & WALLS

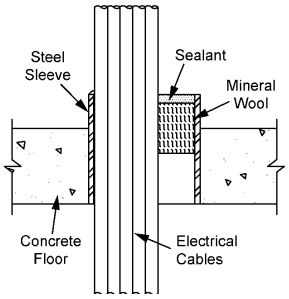

UL SYSTEM C-AJ-3154
F Rating: 1, 2, 3 & 4 Hr • T Rating: 0, 1/2, & 2 3/4 Hr
Optional Sleeve-PVC or Steel
Electrical, Telephone or Data Cables
Annulus: 0" to 2"
Sealant Depth: 1/2"
Forming Materials: Nom 4 pcf Mineral Wool
Sealant Depth: 1/2" for 1, 2, 3 Hr; 1" for 4 Hr

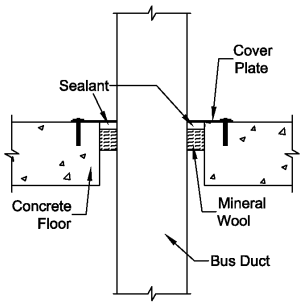

UL SYSTEM C-AJ-6008
F Rating: 3 Hr • T Rating: 0 Hr
Aluminum or Copper Bus Duct 5,000 Amp
Steel Cover Plate
Sealant Depth: 1/2"
Forming Materials: Nom 4 pcf Mineral Wool
Tightly Packed to a depth of 1-1/2"

Fig. 5: BARE & INSULATED METALLIC PIPE PENETRATIONS - RATED GYPSUM WALLBOARD ASSEMBLIES

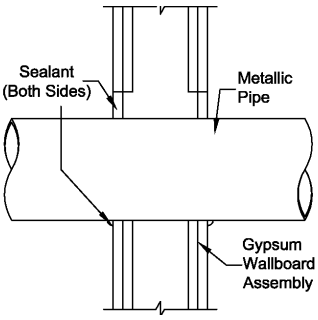

UL SYSTEM W-L-1049
F Rating: 2 hr • T Rating: 0 hr
Steel or Iron Pipe: 24", Copper Pipe: 6"
Annulus: Point Contact to 1-3/4"
Sealant Depth: 5/8" with 3/8" Crown

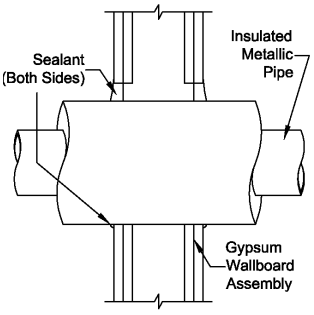

UL SYSTEM W-L-5014
F Rating: 1 & 2 Hr • T Rating: 1 & 2 hr
Steel or Iron Pipe: 12", Copper Pipe: 4"
Insulated with 2" Thick Fiber Glass
or Mineral Wool Pipe Insulation
Annulus: 0" to 1-1/4"
Sealant Depth: 5/8" with 3/8" Crown

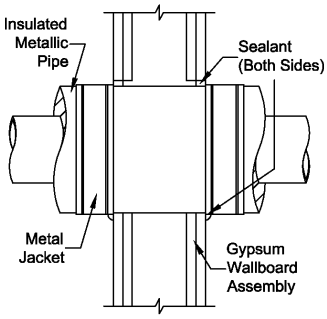

UL SYSTEM W-L-5051
F Rating: 1 & 2 Hr • T Rating: 3/4, 1, 1-1/2 & 2 Hr
Steel or Iron Pipe: 16", Copper Pipe: 6"
Foam Glass Pipe Insulation: 1" to 3" Thick
12" Wide 0.010" Thick Metal Jacket Wrapped Around
Insulation and Secured with Metal Banding as Shown
Annulus: 0" to 1-1/2"
Sealant Depth: 5/8"

to pull back from a surface, clean the surface with a damp rag or sponge and reapply. Work sealant into all areas exercising care to eliminate voids or seams. The surface of the sealant can be smoothed using a putty knife dipped in water. Adding water to the sealant itself is not recommended. Sealant (when dry) may be sanded and painted using most non-solvent based paints. In gypsum wallboard penetrations, crown sealant 1/4" from penetrant to wallboard surface at a point approximately 1/2" or more from opening.

Smoke Sealing: In some applications including firestop collars, SpecSeal® Series SSS Sealant is recommended as a smoke seal. It is suggested in these application that the sealant be applied to both sides of walls. In floor applications, a sealing bead is suggested top and bottom.

Cover Plate: In some designs a galvanized steel cover plate (26 gauge) may be used to upgrade the fire resistance rating to 4 hours. Consult STI Product and Application Guide for dimensional and fastening requirements.

7. MAINTENANCE

Inspection: Installations should be inspected periodically for subsequent damage. Any damage should be repaired using SpecSeal® products per the original approved design.

Retrofit: When adding or removing penetrants, care should be taken to minimize damage to the seal. Reseal using SpecSeal® products per the approved design. NOTE: New penetrants of a different nature than the original design may require a totally new firestop design or extensive modifications to the existing design. Reseal all openings as per the requirements of the modified design.

8. TECHNICAL SERVICE

Specified Technologies Inc. provides toll free technical support to assist in product selection and appropriate installation design. UL Systems, Material Safety Data Sheets and other technical information is available at the Technical Library at www.stifirestop.com or through STI's automated attendant fax back system at 888-526-6800.

9. PRECAUTIONARY INFORMATION

Consult Material Safety Data Sheet for additional information on the safe handling and disposal of this material. Wash areas of skin contact with soap and water. Avoid contact with eyes. SEALANT IS CONDUCTIVE UNTIL DRY.

10. AVAILABILITY

SpecSeal® Series SSS Sealant is available from authorized STI distributors. Consult factory for the names and locations of the nearest sales representatives or distributors. Available packages and additional SpecSeal® Products are listed below.

TABLE D: ORDERING INFORMATION

CAT. NO.	DESCRIPTION
SSS100	10.5 oz. Tube (311 ml) 19 cu.in.
SSS129	29 oz. Tube (858 ml) 52 cu. in.
SSS120	20 oz. Sausage (592 ml) 36 cu. in.
SSS102	2 Gal. Pail (7.6 liters) 462 cu.in.
SSS105	5 Gal. Pail (19.0 liters) 1,155 cu.in.

Additional SpecSeal Products...

SSP Firestop Putty

Available both in bar form and in pads, putty provides easy retrofit for through-penetrations and economical protection for electrical boxes.

SSB Firestop Pillows

Durable, monolithic pillows for installations requiring quick and easy retrofitting. Systems designed for pipes, cables and cable tray in all types of construction!

Intumescent Wrap Strips

Two grades of intumescent wrap strips provide an unmatched combination of flexibility, economy, and expansion (up to 30X). Systems for plastic pipes including FR Polypropylene up to 8" trade size!

Molded Firestop Collars

Easy to install, economical protection for ABS and PVC pipes (both solid and foam core) as well as CPVC, PVDF, and FRPP. Collars available up to 6" trade size.

CITY OF NEW YORK MEA 130-96M

STI Specified Technologies Inc.
200 Evans Way • Somerville, NJ 08876
Phone: (800) 992-1180 • Fax: (908) 526-9623
Facts-On-Demand: (888) 526-6800
STI on the WEB: www.stifirestop.com

Reproduced from Electronic Media

PRODUCT DATA SHEET

Firestop Putty & Putty Pads

1. PRODUCT DESCRIPTION

SpecSeal® Series SSP Putty is a non-hardening, intumescent compound designed to seal through-penetrations as well as certain membrane penetrations against the spread of fire, smoke and toxic gasses. SpecSeal® Putty expands up to 8 times its original size when exposed to high temperatures or flames.

Requiring no tools, SpecSeal® Putty is soft and pliable making it easy to install by hand packing into openings. Its aggressive adhesion makes it suitable for use with all common construction materials as well as cable jacketing and pipes. SpecSeal® Putty remains soft and easy to reuse or retrofit.

SpecSeal® Putty Pads provide this same level of protection in a release lined pad for easy application to electrical boxes or other penetrants. The pad is conveniently sized to fit a typical 1-1/2" deep 4S box with no cutting or piecing required. Faced on both sides with a convenient poly liner, SpecSeal® Putty Pads are easily applied with no mess or excessive residue.

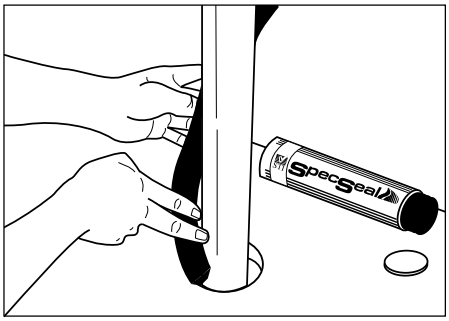

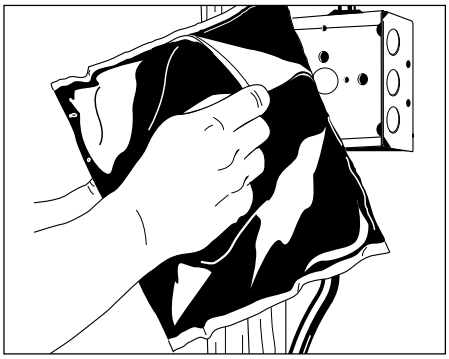

2. APPLICATIONS

Series SSP Putty and Putty Pads are used to seal through-penetrations as well as construction gaps and blank openings. SpecSeal® Putty Pads are used to seal around electrical boxes to reduce sound transmission (see Technical Update) and increase fire resistance. These pads also provide a metered method of application when sealing through-penetrations and in some applications, are used to provide a cushion to allow movement due to settling, expansion and contraction, or vibration.

3. PHYSICAL PROPERTIES

See Table A.

CLASSIFIED UL 3L73

FILL, VOID OR CAVITY MATERIALS CLASSIFIED BY UNDERWRITERS LABORATORIES INC. ® FOR USE IN THROUGH-PENETRATION FIRESTOP SYSTEMS.

SEE UL FIRE RESISTANCE DIRECTORY

UNDERWRITERS LABORATORIES INC.® CLASSIFIED WALL PROTECTION MATERIAL. SEE PRODUCT CATEGORY IN UL FIRE RESISTANCE DIRECTORY

CLASSIFIED c UL

CLASSIFIED FILL, VOID, OR CAVITY MATERIALS FOR USE IN THROUGH-PENETRATION FIRESTOP SYSTEMS. SEE UL DIRECTORY OF PRODUCTS CERTIFIED FOR CANADA AND UL FIRE RESISTANCE DIRECTORY

STI SpecSeal FIRESTOP PUTTY

FM APPROVED

FEATURES

- **Non-Hardening** Easy retrofit!
- **Two Stage Intumescence** features aggressive expansion.
- **Endothermic Fillers** absorb heat & release water.
- **Highly Adhesive Formula** Stays put. Allows movement.
- **Soft & Pliable** for easy installation.
- **No Water-Soluble Expansion Ingredients** means better water resistance!
- **Sound Deadening!** Excellent sound attenuation properties. Reduces noise transmission.

5. SPECIFICATIONS

The firestopping putty shall be a one-part, two-stage intumescent, non-hardening compound. The putty, when exposed to high heat or flame shall be capable of expanding a minimum of 5 times. Range of continuing expansion shall be from 230°F to >1,000°F. The putty shall be soft and pliable with aggressive adhesion and shall not contain any water-soluble intumescent ingredients. The putty shall be UL Classified and/or FM Systems Approved and tested to the requirements of ASTM E814 (UL1479).

SPECIFIED DIVISIONS

DIV.	7	07840	Through-Penetration Firestopping
DIV.	13	13900	Special Construction Fire Suppression & Supervisory Systems
DIV.	15	15250	Mechanical Insulation – Fire Protection
DIV.	16	16050	Basic Electrical Materials & Methods

For the latest Product and System Information, Call STI'S FACTS-ON-DEMAND automated information attendant system by dialing toll-free (888)526-6800!

Table A: PHYSICAL PROPERTIES	
Product Name	Series SSP Putty
Color	Red
Odor	None
Density	1.45
Solids	100%
Expansion Begins	230°F
Volume Expansion	> 500% (free expansion)
In-Service Temp.	≤ 130°F

4. PERFORMANCE

SpecSeal® Series SSP Putty is the basis for systems that meet the exacting criteria of ASTM E814 (UL1479). Systems have been tested for all common forms of construction and most common penetrants with ratings up to 3 hours. Sound attenuation properties have also been tested as per ASTM C919 and E90.

Additionally, SpecSeal® Putty Pads have been tested to UL263 (ASTM E119, NFPA 251) and are classified for up to 2 hours as a Wall Opening Protective Material for use with both metallic and nonmetallic outlet or switch boxes installed in gypsum wallboard assemblies (steel and wood stud assemblies). Boxes protected with SpecSeal® Putty Pads have been successfully tested with box spacing reduced to less than 16". (Not tested nor approved for boxes installed directly back to back).

5. SPECIFICATIONS

See Page 1

6. INSTALLATION INSTRUCTIONS

GENERAL: Areas to be protected must be clean and free of oil, loose dirt, rust or scale. Installation , storage, and in-service temperatures must be below 130°F. No drying or curing is required.

SYSTEM SELECTION: Please consult the STI Product and Application Guide as well as the UL® Fire Resistance Directory for applicable through-penetration firestop systems.

Fig. 1: METALLIC PIPE PENETRATIONS - CONCRETE/MASONRY FLOOR

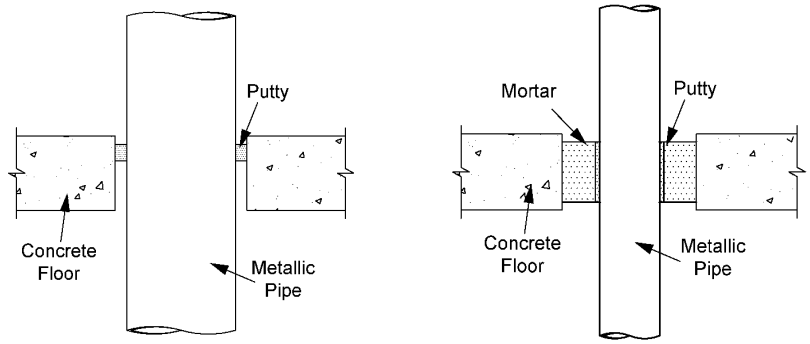

UL System No. C-AJ-1090
F Rating: 2 hr • T Rating: 0 hr
Steel or Iron Pipe: ≤ 6", EMT ≤ 4"
Annulus: Nominal 11/16"
Putty Depth: 1"
Forming Material: Optional

UL System No. C-AJ-8055
F Rating: 2 hr • T Rating: 0 hr
Steel or Iron Pipe: ≤ 6", EMT ≤ 4"
Annulus: 1" to 6 1/2"
SpecSeal Mortar Depth: 3 1/2"
SpecSeal Putty Pad: 1 Layer Encircling

Fig. 2: METALLIC PIPE PENETRATIONS - WALLS

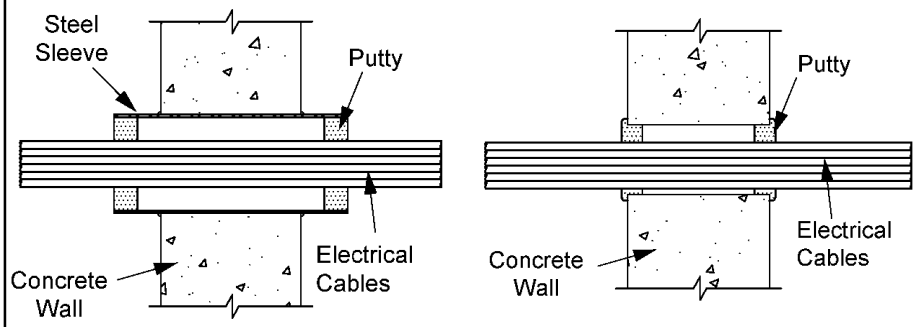

UL System No. W-J-3043
F Rating – 2 Hr • T Rating – 0 Hr
Electrical, Telephone or Data Cables
Annulus: Nom 1/2"
Putty Depth: 1" of Putty on both sides.

UL System No. W-J-3046
F Rating – 2 Hr • T Rating – 0 Hr
Electrical, Telephone or Data Cables
Annulus: 1/4" to 3/4"
Putty Depth: 5/8" of Putty on both sides.

Fig. 3: CABLE PENETRATIONS - CONCRETE/MASONRY FLOORS & WALLS

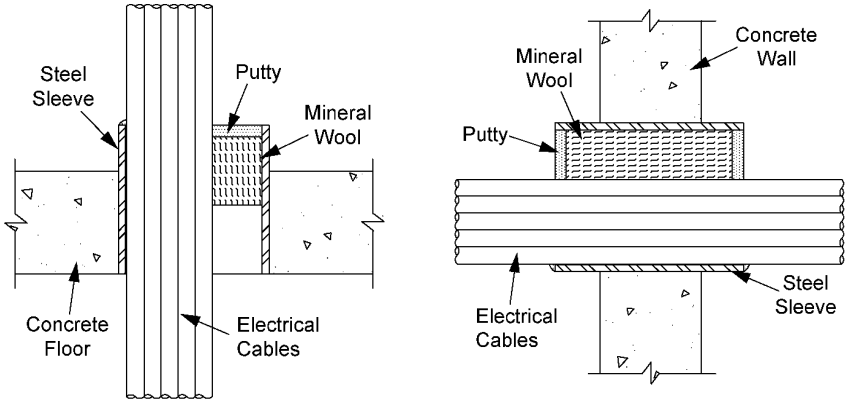

UL System No. C-AJ-3154
F Rating – 3 Hr • T Rating – 1/2 Hr
Electrical, Telephone or Data Cables • Annulus: 0" to 2"
Forming Material: Nom 4 pcf mineral wool to 3" depth.
Putty Depth: 1/2" of Putty.

FORMING: Some installations may require forming as either an integral part of the system or as an option to facilitate installation. In systems where forming is required, mineral wool batts (1 1/2" nom. thickness, 4 lb./cu. ft. density) are recommended. Some gypsum wallboard systems utilize fiberglass. Cut forming material oversize to allow for tight packing. Recess forming material at a depth which allows for the proper depth of fill material.

FILL MATERIAL: SpecSeal® Putty may be installed by hand packing into the penetration. Care should be exercised to work the putty into and against all contact surfaces. Install putty to required depth. Work putty into all areas, exercising care to eliminate voids or seams. Where possible, space all penetrants adequately to allow putty to be packed into all voids and assure a good smoke seal. Most firestop system designs utilize a 1" depth of SpecSeal® Putty.

PUTTY PADS: SpecSeal® Putty Pads are available as a 7.25" x 7.25" x 3/16" poly release faced pad for protection of recessed electrical boxes and as a through-penetration sealant. The pad is sized to fit a common 1-1/2" deep 4S electrical box. To install remove release liner from one side of pad. Align edge of pad to top of box and center pad.

Fig. 4: CABLE PENETRATIONS - GYPSUM BOARD WALLS

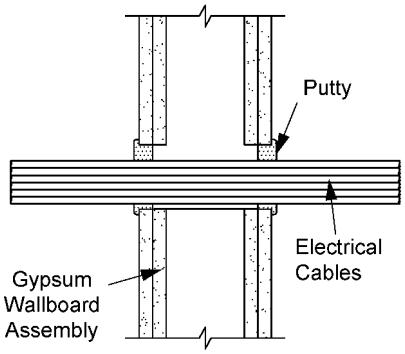

UL System No. W-L-3135
F Rating – 1 & 2 Hr • T Rating – 0 Hr
Electrical, Telephone or Data Cables
Annulus: 1/4" to 3/4"
Putty Depth: 5/8" of Putty on both sides.

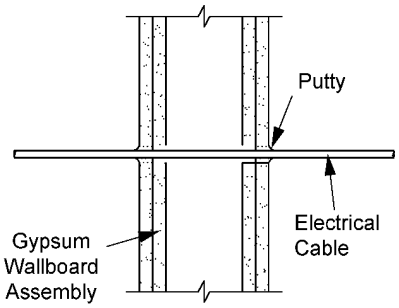

UL System No. W-L-3024
F Rating – 1 & 2 Hr • T Rating – 0,1/2, 1 & 2 Hr
Electrical, Telephone or Data Cables
Annulus: 0" to 1/4"
Putty Depth: 5/8" of Putty on both sides.

Fig. 5: EXAMPLE OF MAINTAINING STC VALUES OF WALL AND CREATING AN EFFECTIVE SOUND BARRIER

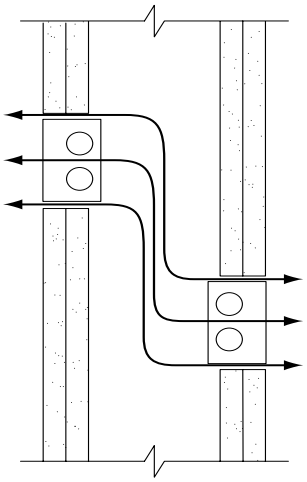

Arrows show path of sound travel.

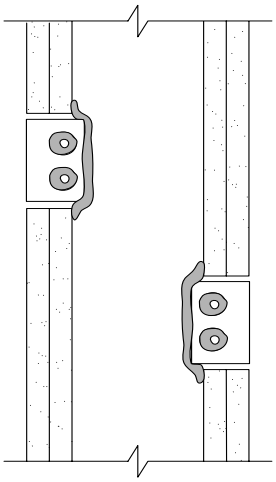

Putty pad reduces sound transmission by blocking path of sound travel.

INSTALLATION OF PUTTY PADS ON ELECTRICAL BOXES (Protective Wall Opening Material)

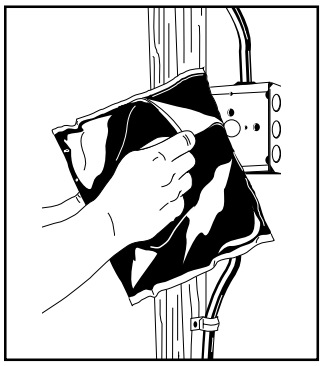

STEP 1

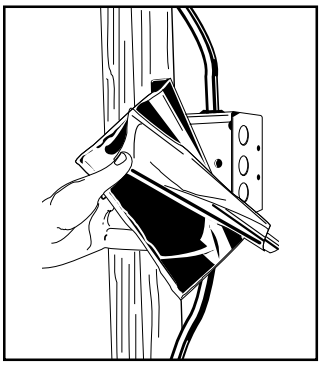

STEP 2

STEP 3

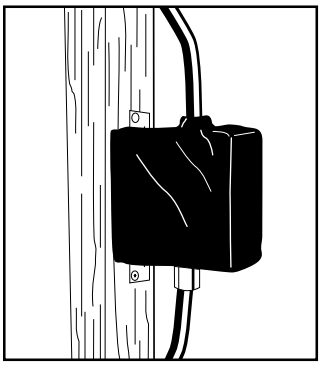

STEP 4

Remove poly liner from one side of pad (Step 1). Align pad to the side of box partially overlapping the stud and adhere. Working to the opposite side of the box to the edges (Step 2). If wall membrane is in place, pack putty into gaps between box and gypsum board slightly overlapping inner wallboard surface. If membrane is to be installed after pad installation, overlap front edge of box so that putty will be compressed around edges of box as wallboard is installed. Cut slits in pad to fit around conduits or cables. (Step 3). Press pad to surface of top, bottom, and sides of box (Step 4). Trim excess at corners and apply to conduit fittings connected to the box. Remove exposed poly liner. Optionally, putty may be packed into inside of conduit fittings to prevent passage of smoke.

Adhere pad to top of box and bring pad down over the back of the box. Adhering pad to all outer surfaces will create excess material at the corners. Pinch pleat material together and fold against sides of box or trim off as desired. Putty pad must be applied to a uniform depth of 3/16" (one layer of pad) over the exterior surface of box for both 1 and 2 hour applications. Optionally, additional putty may be packed into conduit fittings to prevent the transmission of smoke through the conduit system.

Pads may also be used in through-penetrations. Strips of pad may be cut off and packed around penetrants. Pad strips may also be applied to penetrants in a mortar system to create a firestop as well as a cushion to absorb movement due to expansion and contraction or vibration.

CLEAN UP: Remove excess material from all contact surfaces immediately. Clean hands or skin using a waterless hand cleaner. When using water-emulsifiable soaps, apply soap and work over areas of skin contact prior to applying water.

7. MAINTENANCE INSPECTION:

Installations should be inspected periodically for subsequent damage. Any damage should be repaired using SpecSeal® products per the original approved design.

RETROFIT: When adding or removing penetrants, care should be taken to tightly reseal the penetration. Reseal using SpecSeal® Putty per the approved design.

8. TECHNICAL SERVICE

Specified Technologies Inc. provides toll free technical support to assist in product selection and appropriate installation design. Design System Drawings suitable for submittal or specification purposes are available on request.

9. PRECAUTIONARY INFORMATION

Consult Material Safety Data Sheet for additional information on the safe handling and disposal of this material. Wash areas of skin contact with soap and water. Avoid contact with eyes. DO NOT APPLY TO EXPOSED ELECTRICAL CONDUCTORS.

10. AVAILABILITY

SpecSeal® Series SSP Putty is available from authorized STI distributors nationwide. Consult factory for the names and locations of the nearest sales representatives or distributors.

Table C: ORDERING INFORMATION

Cat. No.	Description	Case Quan.
SSP100	36 in^3 (0.6 liter) bar	6
SSP4S	7.25″ x 7.25″ x 3/16″ pad	20
SSP9S	9.00″ x 9.00″ x 3/16″ pad	20

Additional SpecSeal Products...

SSB Firestop Pillows	Durable, monolithic pillows for installations requiring quick and easy retrofitting. Systems designed for pipes, cables and cable tray in all types of construction!
Series SSS Sealant	The industry's most versatile sealant provides the firestopping solutions for a wide range of combustible and noncombustible applications. Water-based intumescent sealant expands up to 8X!
Series LC Sealant	An economical latex firestop sealant for noncombustible applications. Non-halogenated, easy clean up, flexible, water-resistant!
Firestop Mortar	Lightweight, versatile and economical! The best choice for large or complex installations.
Pensil® Silicones	Sealants and foam for through-penetrations and construction joints. Unexcelled aging characteristics and flexibility.
Intumescent Wrap Strips	Two grades of intumescent wrap strips provide an unmatched combination of flexibility, economy, and expansion (up to 30X). Systems for plastic pipes including FR Polypropylene up to 8" trade size!
Molded Firestop Collars	Easy to install, economical protection for ABS and PVC pipes (both solid and foam core) as well as CPVC, PVDF, and FRPP. Collars available up to 6" trade size.
Elastomeric Joint Seals	New economical products for sealing construction joints. Choose caulk or spray applied products tested to UL2079.

CITY OF NEW YORK MEA 30-92M

Specified Technologies Inc.
STI
200 Evans Way • Somerville, NJ 08876
Phone: (800) 992-1180 • Fax: (908) 526-9623
Facts-On-Demand: (888) 526-6800
STI on the WEB: www.stifirestop.com

Material Safety Data Sheet

01-JAN-2003

SpecSeal® TYPE SSS SEALANT

CHEMICAL PRODUCT/COMPANY IDENTIFICATION

Material Identification

PRODUCT NAME.....SpecSeal® SSS Sealant
CHEMICAL FAMILY.....Mixture

Company Identification

MANUFACTURER/DISTRIBUTOR

Specified Technologies, Inc.
200 Evans Way
Somerville, NJ 08876

PHONE NUMBERS

Product Information : 1-908-526-8000
Emergency : 1-800-255-3924

COMPOSITION/INFORMATION ON INGREDIENTS

INGREDIENT NAME	CAS NUMBER
Proprietary mixture	----------

HAZARDS IDENTIFICATION

**********EMERGENCY OVERVIEW**********
* Possible skin and eye irritant. Red paste. *
****

Potential Health Effects:

EYE: Contact may cause irritation.

SKIN: Contact may cause irritation.

INGESTION: Relatively non-toxic.

INHALATION: Irritation of the nose, throat, and lungs may result from over-exposure to vapors or mist.

CHRONIC (CANCER) INFORMATION: Not classified as carcinogenic.

LONG TERM TOXIC EFFECTS: None known.

FIRST AID MEASURES

First Aid

INHALATION: Remove to fresh air.
SKIN CONTACT: Wash thoroughly.
EYE CONTACT: Irrigate eyes with running water for at least 15 minutes. Get medical attention if irritation develops.
INGESTION: None applicable.

FIRE FIGHTING MEASURES

Not a fire hazard.

EXTINGUISHING MEDIA.....Dry Chemical; Carbon Dioxide; Foam; Water spray for large fires.

SPECIAL FIRE FIGHTING PROCEDURES: .....As for surrounding fire.

ACCIDENTAL RELEASE MEASURES

Safeguards (Personnel)
NOTE: Review FIRE FIGHTING MEASURES and HANDLING (PERSONNEL) sections before proceeding with clean-up. Use appropriate PERSONAL PROTECTIVE EQUIPMENT during clean-up.

HANDLING AND STORAGE

Store under ambient conditions. No special handling required.

EXPOSURE CONTROLS/PERSONAL PROTECTION

EYE PROTECTION REQUIREMENTS:.....Safety glasses/goggles.
SKIN PROTECTION REQUIREMENTS: .....Gloves.
RESPIRATOR REQUIREMENTS: .....None.
VENTILATION REQUIREMENTS:.....If needed, use local exhaust ventilation to keep airborne concentrations below the TLV.

Exposure Guidelines
Exposure Limits
PEL(OSHA) : Particulates (Not Otherwise Classified) 15 mg/m3, 8 Hr. TWA, total dust 5 mg/m3, 8 Hr. TWA, respirable dust
TLV (ACGIH) : None Established

PHYSICAL AND CHEMICAL PROPERTIES

PHYSICAL FORM ..... Red paste with minimal odor
SPECIFIC GRAVITY 1.24
PERCENT VOLATILES 20
EVAPORATION RATE ..... >1
BOILING POINT ..... 100 deg. C
SOLUBILITY IN WATER ..... Infinitely dilutable

STABILITY AND REACTIVITY

STABILITY: ..... This is a stable material.
CONDITIONS TO AVOID ..... Storage >55 deg. C
HAZARDOUS POLYMERIZATION: ..... Will not occur.
INCOMPATIBILITIES:…….....None special.

TOXICOLOGICAL INFORMATION

Mixture not tested but based on components:

May be irritating to skin and eyes and may aggravate existing skin and eye conditions.

None of the components are listed as carcinogens.

ECOLOGICAL INFORMATION

No data.

DISPOSAL CONSIDERATIONS

Waste Disposal:
Treatment, storage, transportation, and disposal must be in accordance with applicable Federal, State/Provincial, and Local regulations.

TRANSPORTATION INFORMATION

DOT – not regulated.

REGULATORY INFORMATION

U.S. Federal Regulations

TSCA Inventory Status: Reported/Included.

Section 313 Supplier Notifications.
This product contains no toxic chemicals subject to the reporting requirements of Section 313 of the Emergency Planning and Community Right-To-Know Act of 1986 and of 40 CFR 372:

OTHER INFORMATION

NPCA-HMIS Rating
Health : 1
Flammability : 0
Reactivity : 0
Personal Protection rating to be supplied by user depending on use conditions.

STATE RIGHT-TO-KNOW LAWS

No substances on the state hazardous substances list, for the states indicated below, are used in the manufacture of products on this Material Safety Data Sheet, with the exceptions indicated. While we do not specifically analyze these products, or the raw materials used in their manufacture, for substances on various state hazardous substances lists, to the best of our knowledge the products on this Material Safety Data Sheet contain no such substances except for those specifically listed below:

SUBSTANCES ON THE NEW JERSEY WORKPLACE HAZARDOUS SUBSTANCE LIST PRESENT AT A CONCENTRATION OF 1% OR MORE (0.1% FOR SUBSTANCES IDENTIFIED AS CARCINOGENS, MUTAGENS OR TERATOGENS): NJTSRN-SSS100

WARNING: SUBSTANCES KNOWN TO THE STATE OF CALIFORNIA TO CAUSE CANCER: Possible traces of formaldehyde, ethyl acrylate, acetaldehyde, acrylamide and acrylonitrile.

WARNING: SUBSTANCES KNOWN TO THE STATE OF CALIFORNIA TO CAUSE BIRTH DEFECTS OR OTHER REPRODUCTIVE HARM: None known.

This information relates to the specific material designated and may not be valid for such material used in combination with any other materials or in any process. Such information is to the best of our knowledge and belief accurate and reliable as of the data compiled. However, no representation, warranty, or guarantee is made as to its accuracy, reliability or completeness. It is the user's responsibility to satisfy himself as to the suitability and completeness of such information for his own particular use. We do not accept liability for any loss or damage that may occur form the use of this information.

Responsibility for MSDS :

Specified Technologies, Inc.
200 Evans Way
Somerville, NJ 08876

Material Safety Data Sheet

01-JAN-2003

SpecSeal® Firestop Putty

CHEMICAL PRODUCT/COMPANY IDENTIFICATION

Material Identification

PRODUCT NAME.....SpecSeal® Firestop Putty
CHEMICAL FAMILY.....Mixture

Company Identification

MANUFACTURER/DISTRIBUTOR

Specified Technologies, Inc.
200 Evans Way
Somerville, NJ 08876

PHONE NUMBERS

Product Information : 1-908-526-8000
Emergency : 1-800-255-3924

COMPOSITION/INFORMATION ON INGREDIENTS

INGREDIENT NAME	CAS NUMBER
Proprietary mixture	----------

HAZARDS IDENTIFICATION

**********EMERGENCY OVERVIEW**********
* Possible skin and eye irritant. Red solid. *
****

Potential Health Effects:

EYE: Contact may cause irritation and redness.

SKIN: Contact may cause irritation and redness.

INGESTION: Relatively non-toxic.

INHALATION: Irritation of the nose, throat, and lungs may result from over-exposure to vapors or mist from heated material.

CHRONIC (CANCER) INFORMATION: Not classified as carcinogenic.

LONG TERM TOXIC EFFECTS: None known.

FIRST AID MEASURES

First Aid

INHALATION: Remove to fresh air.
SKIN CONTACT: Wash thoroughly.
EYE CONTACT: Irrigate eyes with running water for at least 15 minutes. Get medical attention if irritation develops.
INGESTION: None applicable.

FIRE FIGHTING MEASURES

FLASH POINT >163 deg. C based on most volatile component.

EXTINGUISHING MEDIA.....Dry Chemical; Carbon Dioxide; Foam; Water spray for large fires.

SPECIAL FIRE FIGHTING PROCEDURES: .....As for surrounding fire.

ACCIDENTAL RELEASE MEASURES

Safeguards (Personnel)
NOTE: Review FIRE FIGHTING MEASURES and HANDLING (PERSONNEL) sections before proceeding with clean-up. Use appropriate PERSONAL PROTECTIVE EQUIPMENT during clean-up.

HANDLING AND STORAGE

Store under ambient conditions. No special handling required.

EXPOSURE CONTROLS/PERSONAL PROTECTION

EYE PROTECTION REQUIREMENTS:.....Safety glasses/goggles.
SKIN PROTECTION REQUIREMENTS: .....Gloves.
RESPIRATOR REQUIREMENTS: .....None.
VENTILATION REQUIREMENTS:.....None.

Exposure Guidelines
None.

PHYSICAL AND CHEMICAL PROPERTIES

PHYSICAL FORM ..... Red solid with minimal odor
SPECIFIC GRAVITY..... 1.49
PERCENT VOLATILES..... none
SOLUBILITY IN WATER..... Very slight

STABILITY AND REACTIVITY

STABILITY: ..... This is a stable material.
CONDITIONS TO AVOID..... Storage >55 deg. C
HAZARDOUS POLYMERIZATION:..... Will not occur.
INCOMPATIBILITIES:…….....None special.

TOXICOLOGICAL INFORMATION

Mixture not tested but based on components:

May be irritating to skin and eyes and may aggravate existing skin and eye conditions.
Irritation of the nose, throat, and lungs may result from over-exposure to vapors or mist from heated material.

None of the components are listed as carcinogens.

ECOLOGICAL INFORMATION

No data. Not anticipated to be environmental hazard.

DISPOSAL CONSIDERATIONS

Waste Disposal:
Treatment, storage, transportation, and disposal must be in accordance with applicable Federal, State/Provincial, and Local regulations.

TRANSPORTATION INFORMATION

DOT – not regulated.

REGULATORY INFORMATION

U.S. Federal Regulations

TSCA Inventory Status: Article.

Section 313 Supplier Notifications.
This product contains no toxic chemicals subject to the reporting requirements of Section 313 of the Emergency Planning and Community Right-To-Know Act of 1986 and of 40 CFR 372:

OTHER INFORMATION

NPCA-HMIS Rating
Health : 1
Flammability : 0
Reactivity : 0
Personal Protection rating to be supplied by user depending on use conditions.

STATE RIGHT-TO-KNOW LAWS

No substances on the state hazardous substances list, for the states indicated below, are used in the manufacture of products on this Material Safety Data Sheet, with the exceptions indicated. While we do not specifically analyze these products, or the raw materials used in their manufacture, for substances on various state hazardous substances lists, to the best of our knowledge the products on this Material Safety Data Sheet contain no such substances except for those specifically listed below:

SUBSTANCES ON THE NEW JERSEY WORKPLACE HAZARDOUS SUBSTANCE LIST PRESENT AT A CONCENTRATION OF 1% OR MORE (0.1% FOR SUBSTANCES IDENTIFIED AS CARCINOGENS, MUTAGENS OR TERATOGENS): NJTSRN-SSP

WARNING: SUBSTANCES KNOWN TO THE STATE OF CALIFORNIA TO CAUSE CANCER: Possible traces of formaldehyde and acrylonitrile.

WARNING: SUBSTANCES KNOWN TO THE STATE OF CALIFORNIA TO CAUSE BIRTH DEFECTS OR OTHER REPRODUCTIVE HARM: None known.

This information relates to the specific material designated and may not be valid for such material used in combination with any other materials or in any process. Such information is to the best of our knowledge and belief accurate and reliable as of the data compiled. However, no representation, warranty, or guarantee is made as to its accuracy, reliability or completeness. It is the user's responsibility to satisfy himself as to the suitability and completeness of such information for his own particular use. We do not accept liability for any loss or damage that may occur form the use of this information.

Responsibility for MSDS :

Specified Technologies, Inc.
200 Evans Way
Somerville, NJ 08876